Chapter 5 - Ball valves - Shut-off fittings

Ball valves, FT/FT, FT/MT, MT/MT

Sleeve ball valves
brass
FT/FT

Screw-in ball valves
brass
FT/MT

Changeable handles
for standard valves

Special ball valves
DVGW, drinking water,
oxygen, brass

Stainless steel
collar ball valves

Special ball valves
stainless steel, oxygen,
spring closing

Ball valves
with male thread

Ball valves with forced exhaust, discharge valves

Mini ball valves
with drainage

Brass ball valves
with drainage

Stainless steel ball
valves with drainage

Manual slide valves

Lockable
manual slide valves
safety version

3/2-way valves
with push-in fitting

Discharge valves

Mini ball valves & elbow ball valves

Mini ball valves,
compact

Mini ball valves,
with toggle grip

Mini ball valves, with
screwdriver actuation

Mini ball valves,
made of stainless steel

Mini ball valves,
with long lever

KFE ball valves
and discharge valves

Elbow ball valves

High pressure ball valves

High pressure ball
valves, steel

High pressure ball
valves, stainless steel

Block ball valves,
stainless steel

High pressure ball
valves with cutting
ring connection

Stainless steel high
pressure ball valves
with cutting ring

Pneumatic controlled
ball valves

High pressure
3-way ball valves

Shut-off valves, gate valves & needle valves

Needle valves

High pressure
needle valves

Ball shut-off valves

Sleeve shut-off valves
and gate valves

Swing sleeve
shut-off valves

Quick shut-off valves

Drain and
venting valves

3-way ball valves

3-way T ball valves compact

3-way ball valves (L and T hole)

Stainless steel 3-way ball valves

High pressure 3-way ball valves, steel

High pressure 3-way ball valves, stainless steel

3-way flange ball valves

Stainless steel 3-way flange ball valves

Flange ball valves

Compact flange ball valves

Stainless steel compact flange ball valves

Flange ball valves 1 part

Stainless steel flange ball valves

Flange ball valves DVGW tested

Compact flange ball valves with pneumatic actuator

Flange ball valves with pneumatic actuator

Pneumatically & electrically actuated ball valves and valves

Pneumatically activated shut-off valves

Ball valves pneumatically actuated

3-way ball valves with pneum. actuator

Ball valves with electr. rotary actuator

3-way ball valves with electr. rotary actuator

High pressure ball valve with actuator

Ball valves with timer

Butterfly valves, actuators for butterfly valves and ball valves

Intermediate flange butterfly valves KLZ

Flange mounted butterfly valves KLA

Butterfly valves with pneum. actuator

Pneumatically controlled rotary actuator

Limit switch boxes, for pneum. actuators

Electrically controlled rotary actuators

Replacement ball valves, assembly flange ISO 5211

Ball valves

Ball valves, 2-piece, full bore — Eco-Line/PN 25

Materials: Housing: Brass nickel-plated, ball: Brass chrome-plated, seal: PTFE/NBR
Temperature range: -20°C to max. +95°C
Operating range: Compressed air, water, oils
☞ **Optional:** With butterfly handle **-KN** (1/4"-1 1/4")

standard

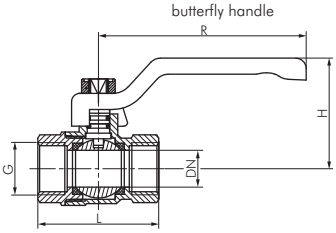
butterfly handle

Type	G	DN	L	H	R	PN
KH 14 B E	Rp 1/4"	9	40.0	38	75	25 bar
KH 38 B E	Rp 3/8"	10	41.0	38	75	25 bar
KH 12 B E	Rp 1/2"	15	48.5	43	85	25 bar
KH 34 B E	Rp 3/4"	19	56.0	46	85	25 bar
KH 10 B E	Rp 1"	24	65.0	54	113	25 bar
KH 114 B E	Rp 1 1/4"	30	76.0	67	142	25 bar
KH 112 B E	Rp 1 1/2"	37	85.0	73	142	25 bar
KH 20 B E*	Rp 2"	47	99.0	83	175	25 bar
KH 212 B E*	Rp 2 1/2"	62	132.0	108	250	25 bar
KH 30 B E*	Rp 3"	74	152.0	117	250	25 bar
KH 40 B E*	Rp 4"	90	178.0	128	250	25 bar

Replacement handles**
G KH 1438 B E
G KH 1438 B E
G KH 1234 B E
G KH 1234 B E
G KH 10 B E
G KH 114112 B E
G KH 114112 B E
G KH 20 B E
G KH 2123040 B E
G KH 2123040 B E
G KH 2123040 B E

* only suitable for water and oils, ** does not fit on ball valves with butterfly handle

☞ **Order example:** KH 14 B E **

Standard type

Designation for the options:
Butterfly handle . . . . . **-KN**

Ball valves, 2-piece, full bore, short design — up to 50 bar

Materials: Housing: Brass nickel-plated, ball: Brass hard chrome-plated, seal: PTFE/NBR
Temperature range: -20°C to max. +150°C
Operating range: Water (no steam), neutral, gaseous and non-aggressive, liquid media, mineral oils, compressed air, vacuum (max. -0.9 bar)

standard

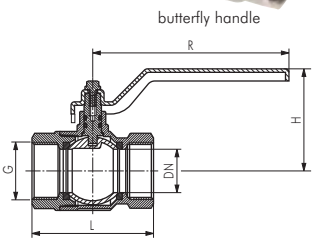
butterfly handle

Advantages: • By purchasing the optional combi handles (page 281), you can construct various handle variations:
- Standard handle in red, yellow, blue and black
- Toggle grip in colours red, yellow, blue, black and green
- Flat steel handle in red, yellow and green (optional: lockable)
- Long handle in red

Type standard	H	R	Type butterfly handle	H	R	G	DN	L	PN	Combi handle size*
KH 14 B	37	80	KH 14 B KN	37	24	G 1/4"	10	44.4	50 bar	1
KH 38 B	37	80	KH 38 B KN	37	24	G 3/8"	10	44.4	50 bar	1
KH 12 B	41	80	KH 12 B KN	41	24	G 1/2"	15	50.5	50 bar	1
KH 34 B	55	113	KH 34 B KN	47	31	G 3/4"	20	57.5	40 bar	3
KH 10 B	59	113	KH 10 B KN	51	31	G 1"	25	70.0	40 bar	3
KH 114 B	75	138	KH 114 B KN	64	35	G 1 1/4"	32	80.5	30 bar	4
KH 112 B	81	138	---	---	---	G 1 1/2"	40	94.5	30 bar	4
KH 20 B	96	158	---	---	---	G 2"	50	112.5	25 bar	5
KH 212 B	115	197	---	---	---	G 2 1/2"	65	134.5	18 bar	6
KH 30 B	133	250	---	---	---	G 3"	80	157.0	16 bar	7
KH 40 B	149	250	---	---	---	G 4"	100	190.0	14 bar	7

* combi handles can be found on page 281.

Ball valves, 2-piece, full bore — up to 50 bar

Materials: Housing: Brass nickel-plated, ball: Brass hard chrome-plated, seal: PTFE/NBR
Temperature range: -20°C to max. +150°C
Length according to DIN 3202-M3
Operating range: Water (no steam), neutral, gaseous and non-aggressive, liquid media, mineral oils, compressed air, vacuum (max. -0.9 bar)

standard

butterfly handle

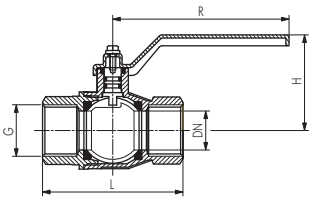

Type standard	H	R	Type butterfly handle	H	R	G	DN	L	PN	Combi handle size**
KH 14	37	80	KH 14 KN	37	24	Rp 1/4"	10	49.5*	50 bar	1
KH 38	37	80	KH 38 KN	37	24	Rp 3/8"	10	52.4*	50 bar	1
KH 12	49	89	KH 12 KN	44	27	Rp 1/2"	15	75.0	50 bar	2
KH 34	58	113	KH 34 KN	50	31	Rp 3/4"	20	80.0	40 bar	3
KH 10	61	113	KH 10 KN	53	31	Rp 1"	25	90.0	40 bar	3
KH 114	75	138	---	---	---	Rp 1 1/4"	32	110.0	30 bar	4
KH 112	91	158	---	---	---	Rp 1 1/2"	40	120.0	30 bar	5
KH 20	98	158	---	---	---	Rp 2"	50	140.0	25 bar	5
KH 212	127	250	---	---	---	G 2 1/2"	65	148.0*	18 bar	7
KH 30	136	250	---	---	---	G 3"	80	168.0*	16 bar	7
KH 40	154	250	---	---	---	G 4"	100	204.0*	14 bar	7

* no DIN length, ** combi handles are found on page 281, *** not for combi handle size 3

Ball valves, DVGW tested (PN 5/MOP 5) — up to 50 bar

EN 331

Materials: Housing: Brass nickel-plated, ball: Brass hard chrome-plated, seal: PTFE/NBR
Temperature range: -20°C to max. +150°C, gas: -20°C to max. +60°C
Length according to DIN 3202-M3
Operating range: Water (no steam), neutral, gaseous and non-aggressive, liquid media, mineral oils, compressed air, vacuum (max. -0.9 bar), gases in accordance with DVGW worksheet (e.g. natural gas, city gas, liquid gas up to 5 bar)

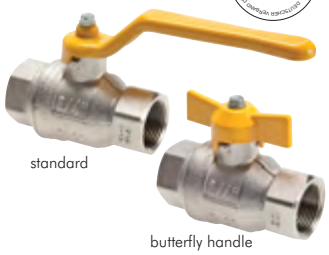

Type standard	H	R	Type butterfly handle	H	R	G	DN	L	PN*	Combi handle size***
KH 14 DVGW	37	80	KH 14 DVGW KN	37	24	Rp 1/4"	10	49.5**	50 bar	1
KH 38 DVGW	37	80	KH 38 DVGW KN	37	24	Rp 3/8"	10	52.4**	50 bar	1
KH 12 DVGW	49	89	KH 12 DVGW KN	44	27	Rp 1/2"	15	75.0	50 bar	2
KH 34 DVGW	58	113	KH 34 DVGW KN	50	31	Rp 3/4"	20	80.0	40 bar	3
KH 10 DVGW	61	113	KH 10 DVGW KN	53	31	Rp 1"	25	90.0	40 bar	3
KH 114 DVGW	75	138	---	---	---	Rp 1 1/4"	32	110.0	30 bar	4
KH 112 DVGW	91	158	---	---	---	Rp 1 1/2"	40	120.0	30 bar	5
KH 20 DVGW	98	158	---	---	---	Rp 2"	50	140.0	25 bar	5

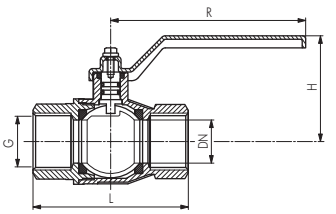

* for gas up to PN 5 bar/MOP 5, ** no DIN length, *** combi handles are found on page 281, **** not for combi handle size 3

Ball valves for drinking water, DVGW & KTW tested, EN 13828 — up to 50 bar

KTW

Materials: Housing: Brass chrome-plated, lever: Zinc-plated steel, ball: Brass hard chrome-plated, seal: PTFE/NBR
Temperature range: -20°C to max. +150°C
Operating range: Drinking water, water

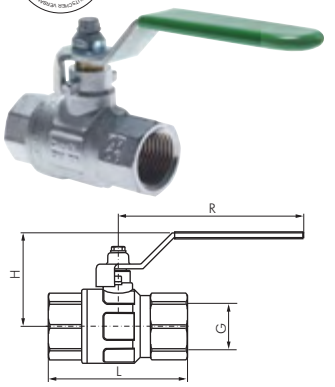

Type	G	DN	L	H	R	PN	Combi handle size*
KH 14 TW	Rp 1/4"	8	49.5	41.5	85.5	50 bar	1
KH 38 TW	Rp 3/8"	10	52.4	41.5	85.5	50 bar	1
KH 12 TW	Rp 1/2"	15	61.0	49.8	92.5	50 bar	2
KH 34 TW	Rp 3/4"	20	68.0	56.3	113.5	40 bar	3
KH 10 TW	Rp 1"	25	85.0	60.3	113.5	40 bar	3
KH 114 TW	Rp 1 1/4"	32	99.5	76.5	138.0	30 bar	4
KH 112 TW	Rp 1 1/2"	40	109.0	92.0	158.0	30 bar	5
KH 20 TW	Rp 2"	50	130.0	99.0	158.0	25 bar	5

* combi handles can be found on page 281

Combi handles for ball valves made of nickel-plated brass

Type red	Type yellow	Type blue	Type black	Type green	Combi size
Standard (steel zinc-plated and painted, size 7: aluminium painted)					
KOMBI 1 S ROT	KOMBI 1 S GELB	KOMBI 1 S BLAU	KOMBI 1 S SCHWARZ	---	1
KOMBI 2 S ROT	KOMBI 2 S GELB	KOMBI 2 S BLAU	KOMBI 2 S SCHWARZ	---	2
KOMBI 3 S ROT	KOMBI 3 S GELB	KOMBI 3 S BLAU	KOMBI 3 S SCHWARZ	---	3
KOMBI 4 S ROT	KOMBI 4 S GELB	KOMBI 4 S BLAU	KOMBI 4 S SCHWARZ	---	4
KOMBI 5 S ROT	KOMBI 5 S GELB	KOMBI 5 S BLAU	KOMBI 5 S SCHWARZ	---	5
KOMBI 6 S ROT	KOMBI 6 S GELB	---	KOMBI 6 S SCHWARZ	---	6
KOMBI 7 S ROT	KOMBI 7 S GELB	---	KOMBI 7 S SCHWARZ	---	7
Butterfly (aluminium painted)					
KOMBI 1 K ROT	KOMBI 1 K GELB	KOMBI 1 K BLAU	KOMBI 1 K SCHWARZ	KOMBI 1 K GRUN	1
KOMBI 2 K ROT	KOMBI 2 K GELB	KOMBI 2 K BLAU	KOMBI 2 K SCHWARZ	KOMBI 2 K GRUN	2
KOMBI 3 K ROT	KOMBI 3 K GELB	KOMBI 3 K BLAU	KOMBI 3 K SCHWARZ	KOMBI 3 K GRUN	3
KOMBI 4 K ROT	---	KOMBI 4 K BLAU	KOMBI 4 K SCHWARZ	---	4
Long (aluminium painted, 60 - 68 - 74 - 78 - 82 - 88 - 120 mm high)					
KOMBI 1 L ROT	---	---	---	---	1
KOMBI 2 L ROT	---	---	---	---	2
KOMBI 3 L ROT	---	---	---	---	3
KOMBI 4 L ROT	---	---	---	---	4
KOMBI 5 L ROT	---	---	---	---	5
KOMBI 6 L ROT	---	---	---	---	6
KOMBI 7 L ROT	---	---	---	---	7
Flat steel (zinc-plated steel with plastic coating)					
KOMBI 1 F ROT	KOMBI 1 F GELB*	---	---	KOMBI 1 F GRUN	1
KOMBI 2 F ROT	KOMBI 2 F GELB*	---	---	KOMBI 2 F GRUN	2
KOMBI 3 F ROT	KOMBI 3 F GELB*	---	---	KOMBI 3 F GRUN	3
KOMBI 4 F ROT	KOMBI 4 F GELB*	---	---	KOMBI 4 F GRUN	4
KOMBI 5 F ROT	KOMBI 5 F GELB*	---	---	KOMBI 5 F GRUN	5
Lock adapter for closing the flat steel handle, 6 mm borehole for VHS 30 H lock					
KOMBI 1 F KEY					1
KOMBI 2 F KEY					2
KOMBI 3 F KEY					3

* with imprint "EN 331"

Ball valves

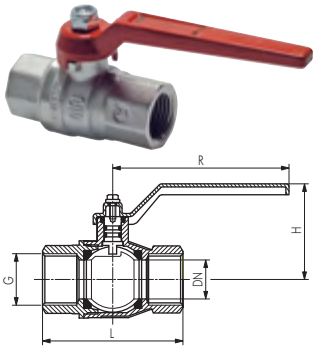

Ball valves, 2-piece, full bore, silicone-free production — up to 80 bar

Materials: Housing: Brass nickel-plated, ball: Brass hard chrome-plated, seal: PTFE, handle: Aluminium die-casting
Temperature range: -20°C to max. +150°C
Operating range: Compressed air, vacuum (max. -0.9 bar), water, oils, non-corrosive liquids and hydrocarbons

Type	G	DN	L	H	R	PN
KH 14 SF	Rp 1/4"	10	47.5	39.5	80	80 bar
KH 38 SF	Rp 3/8"	10	49.5	39.5	80	80 bar
KH 12 SF	Rp 1/2"	15	65.0	41.5	95	80 bar
KH 34 SF	Rp 3/4"	20	73.5	51.0	115	80 bar
KH 10 SF	Rp 1"	25	86.5	55.0	115	80 bar
KH 114 SF	Rp 1 1/4"	32	101.5	64.5	130	64 bar
KH 112 SF	Rp 1 1/2"	40	111.5	75.5	150	64 bar
KH 20 SF	Rp 2"	50	132.5	87.5	170	64 bar
KH 212 SF	Rp 2 1/2"	65	158.0	108.0	170	40 bar
KH 30 SF	Rp 3"	80	181.5	119.5	235	25 bar
KH 40 SF	Rp 4"	100	219.0	142.0	235	16 bar

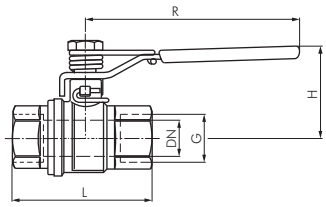

Ball valves with spring return — up to 65 bar

Materials: Housing: Brass nickel-plated, ball: Brass hard chrome-plated, seal: PTFE/FKM, spring: 1.4310, handle: Zinc-plated steel, manufactured without silicone
Temperature range: -40°C to max. +170°C (dependent on operating pressure), fuels -20°C to max. +60°C
Length according to DIN 3202-M3
Operating range: Water, compressed air, vacuum (max. -0.98 bar), oils, fuels (5 bar max.), heating oil
Function: In the basic setting the ball valve is in the closed position. It is opened against the spring force. When releasing the handle it jumps into the "Close" position. Closing should be supported manually (no quick shut-off valve).

Type	G	DN	L	H	R	PN
KH 14 FS	Rp 1/4"	8	50	40	100	65 bar
KH 38 FS	Rp 3/8"	10	60	40	100	65 bar
KH 12 FS	Rp 1/2"	15	75	43	100	65 bar
KH 34 FS	Rp 3/4"	20	80	51	120	40 bar
KH 10 FS	Rp 1"	25	90	55	120	40 bar
KH 114 FS	Rp 1 1/4"	32	110	75	158	40 bar
KH 112 FS	Rp 1 1/2"	40	120	81	158	40 bar
KH 20 FS	Rp 2"	50	140	88	158	40 bar

EN 331 KTW DVGW

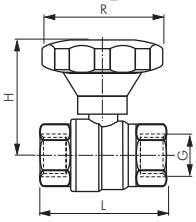

Soft close ball valves, DVGW tested (PN 5/MOP 5) — up to 50 bar

Materials: Housing: Brass nickel-plated, ball: Brass hard chrome-plated, seal: PTFE, handle: GFK turning handle (360° rotatable)
Temperature range: -15°C to max. +120°C, gas: -20°C to max. +60°C
Operating range: Drinking water (DVGW certified to PN 10), water, air, neutral gases, oils, solvents, non-aggressive liquids, gases in accordance with DVGW worksheet (e.g. natural gas, city gas, liquid gas up to PN 5)

Advantage: • To open or close the ball valve, it is necessary to turn the handle 360°. Therefore, a very slow opening and closing is possible: Pressure thrusts are avoided. The scale allows a reproducible flow control.

Type	G	DN	L	H	R	PN*
KH 14 SS	Rp 1/4"	10	49	63	83	50 bar
KH 38 SS	Rp 3/8"	10	51	63	83	50 bar
KH 12 SS	Rp 1/2"	15	61	70	83	50 bar
KH 34 SS	Rp 3/4"	20	70	76	83	50 bar
KH 10 SS	Rp 1"	25	84	80	83	40 bar
KH 114 SS	Rp 1 1/4"	32	98	110	130	40 bar
KH 112 SS	Rp 1 1/2"	40	108	116	130	40 bar
KH 20 SS	Rp 2"	50	130	123	130	40 bar

* for gas up to PN 5 bar/MOP 5, for drinking water up to PN 10 bar/MOP 10

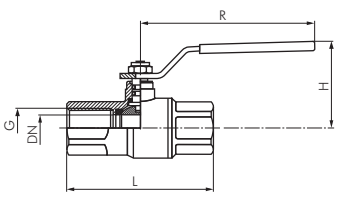

Ball valves, 2-piece, brass, for use in oxygen systems — PN 30

Materials: Housing: Brass nickel-plated, ball: Brass hard chrome-plated, seal: PTFE/NBR, handle: Zinc-plated steel
Temperature range: -10°C to max. +95°C (dependent on operating pressure)
Using a special type of grease makes it suitable for oxygen, its length conforming to DIN 3202-M3
Operating range: Oxygen (industrial), Argon
Delivery: This ball valve is delivered in a heat-sealed plastic bag.

Type	G	DN	L	H	R	PN
KH 14 SAU	Rp 1/4"	8	50	41	70	30 bar
KH 38 SAU	Rp 3/8"	10	60	41	70	30 bar
KH 12 SAU	Rp 1/2"	15	75	43	90	30 bar
KH 34 SAU	Rp 3/4"	20	80	47	90	30 bar
KH 10 SAU	Rp 1"	25	90	72	135	30 bar
KH 114 SAU	Rp 1 1/4"	32	110	75	135	30 bar
KH 112 SAU	Rp 1 1/2"	40	120	82	180	30 bar
KH 20 SAU	Rp 2"	50	140	89	180	30 bar

Screw-in ball valves, 2-piece, full bore — Eco-Line/PN 25

Materials: Housing: Brass nickel-plated, ball: Brass chrome-plated, seal: PTFE/NBR
Temperature range: Air: -20°C to max. +95°C
Operating range: Compressed air, water, oils
☞ **Optional:** With butterfly handle **-KN** (1/4"-1 1/4")

Type	G1/G2	DN	L	H	R	PN	Replacement handles**
KH 14 B iA E	R/Rp 1/4"	9	48.5	38	75	25 bar	G KH 1438 B E
KH 38 B iA E	R/Rp 3/8"	10	50.0	38	75	25 bar	G KH 1438 B E
KH 12 B iA E	R/Rp 1/2"	15	57.5	43	85	25 bar	G KH 1234 B E
KH 34 B iA E	R/Rp 3/4"	19	63.8	46	85	25 bar	G KH 1234 B E
KH 10 B iA E	R/Rp 1"	24	74.5	54	113	25 bar	G KH 10 B E
KH 114 B iA E	R/Rp 1 1/4"	30	87.0	67	142	25 bar	G KH 114112 B E
KH 112 B iA E	R/Rp 1 1/2"	37	98.0	73	142	25 bar	G KH 114112 B E
KH 20 B iA E*	R/Rp 2"	47	113.5	83	175	25 bar	G KH 20 B E

* only suitable for water and oils, ** does not fit on ball valves with butterfly handle

☞ **Order example:** KH 14 B iA E **

Standard type

Designation for the options:
Butterfly handle . . . . . .-KN

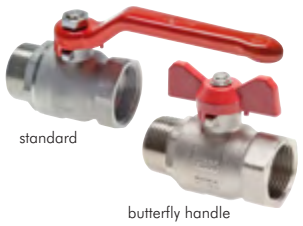
standard

butterfly handle

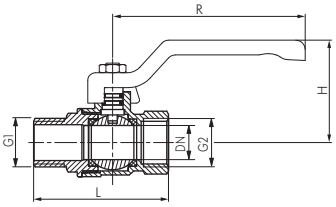

Screw-in ball valves, 2-piece, full bore — up to 50 bar

Materials: Housing: Brass nickel-plated, ball: Brass hard chrome-plated, seal: PTFE/NBR
Temperature range: -20°C to max. +150°C
Operating range: Water (no steam), neutral, gaseous and non-aggressive, liquid media, mineral oils, compressed air, vacuum (max. -0.9 bar)

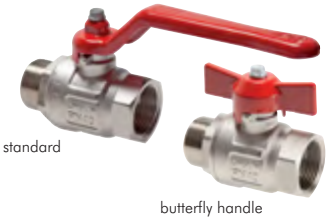
standard

butterfly handle

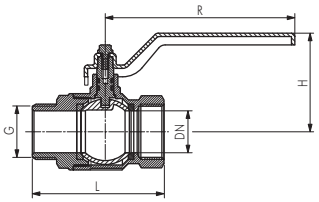

Screw-in ball valves, 2-piece, full bore, short design — up to 50 bar

Type standard	H	R	Type butterfly handle	H	R	G	DN	L	PN	Combi handle size*
KH 14 B iA	37	80	KH 14 B iA KN	37	24	G 1/4"	8	54.0	50 bar	1
KH 38 B iA	37	80	KH 38 B iA KN	37	24	G 3/8"	10	54.0	50 bar	1
KH 12 B iA	41	80	KH 12 B iA KN	41	24	G 1/2"	15	58.5	50 bar	1
KH 34 B iA	55	113	KH 34 B iA KN	47	31	G 3/4"	20	66.5	40 bar	3
KH 10 B iA	59	113	KH 10 B iA KN	51	31	G 1"	25	78.5	40 bar	3
KH 114 B iA	75	138	KH 114 B iA KN	64	35	G 1 1/4"	32	91.5	30 bar	4
KH 112 B iA	81	138	---	---	---	G 1 1/2"	40	105.5	30 bar	4
KH 20 B iA	96	158	---	---	---	G 2"	50	122.0	25 bar	5

* combi handles can be found on page 281.

Screw-in ball valves, 2-piece, full bore — up to 50 bar

standard

butterfly handle

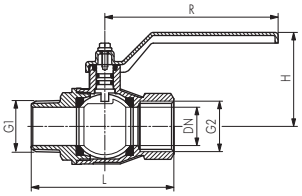

Type standard	H	R	Type butterfly handle	H	R	G1/G2	DN	L	PN	Combi handle size*
KH 14 iA	37	80	KH 14 iA KN	37	24	R/Rp 1/4"	8	56.9	50 bar	1
KH 38 iA	37	80	KH 38 iA KN	37	24	R/Rp 3/8"	10	58.9	50 bar	1
KH 12 iA	49	89	KH 12 iA KN	44	27	R/Rp 1/2"	15	76.5	50 bar	2
KH 34 iA	58	113	KH 34 iA KN	50	31	R/Rp 3/4"	20	83.5	40 bar	3
KH 10 iA	61	113	KH 10 iA KN	53	31	R/Rp 1"	25	93.0	40 bar	3
KH 114 iA	75	138	---	---	---	R/Rp 1 1/4"	32	110.0	30 bar	4
KH 112 iA	91	158	---	---	---	R/Rp 1 1/2"	40	121.0	30 bar	5
KH 20 iA	98	158	---	---	---	R/Rp 2"	50	140.5	25 bar	5
KH 212 iA	127	250	---	---	---	G 2 1/2"	65	155.5	18 bar	7
KH 30 iA	136	250	---	---	---	G 3"	80	178.0	16 bar	7
KH 40 iA	154	250	---	---	---	G 4"	100	208.0	14 bar	7

* combi handles can be found on page 281, ** not for combi handle size 3

Ball valves with male threads, 2-piece, full bore — up to 20 bar

Materials: Housing: Brass nickel-plated, ball: Brass hard chrome-plated, seal: PTFE
Temperature range: -20°C to max. +110°C
Operating range: Water (no steam), neutral, gaseous and non-aggressive, liquid media, mineral oils, fuel and compressed air, vacuum (max. -0.9 bar)

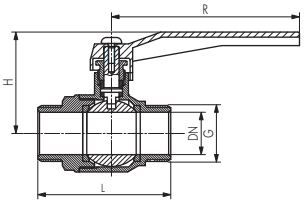

Type	G	DN	L	H	R	PN
KH 38 AA	G 3/8"	10	49	46	92	20 bar
KH 12 AA	G 1/2"	15	59	51	92	20 bar
KH 34 AA	G 3/4"	20	65	54	92	20 bar
KH 10 AA	G 1"	25	77	63	115	20 bar
KH 114 AA	G 1 1/4"	32	87	77	125	16 bar
KH 112 AA	G 1 1/2"	40	103	88	150	16 bar
KH 20 AA	G 2"	50	113	97	150	16 bar

Ball valves

Screw-in ball valves, DVGW tested (PN 5/MOP 5) — up to 50 bar

EN 331

Materials: Housing: Brass nickel-plated, ball: Brass hard chrome-plated, seal: PTFE/NBR
Temperature range: -20°C to max. +150°C, gas: -20°C to max. +60°C
Operating range: Water (no steam), neutral, gaseous and non-aggressive, liquid media, mineral oils, compressed air, vacuum (max. -0.9 bar), gases in accordance with DVGW worksheet (e.g. natural gas, city gas, liquid gas up to 5 bar)

standard

butterfly handle

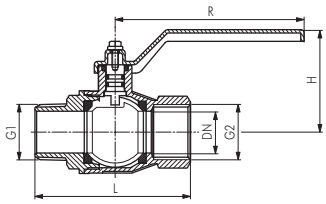

Type standard	H	R	Type butterfly handle	H	R	G1/G2	DN	L	PN*	Combi handle size**
KH 14 iA DVGW	37	80	KH 14 iA DVGW KN	37	24	R/Rp 1/4"	8	56.9	50 bar	1
KH 38 iA DVGW	37	80	KH 38 iA DVGW KN	37	24	R/Rp 3/8"	10	58.9	50 bar	1
KH 12 iA DVGW	49	89	KH 12 iA DVGW KN	44	27	R/Rp 1/2"	15	76.5	50 bar	2
KH 34 iA DVGW	58	113	KH 34 iA DVGW KN	50	31	R/Rp 3/4"	20	83.5	40 bar	3
KH 10 iA DVGW	61	113	KH 10 iA DVGW KN	53	31	R/Rp 1"	25	93.0	40 bar	3
KH 114 iA DVGW	75	138	---	---	---	R/Rp 1 1/4"	32	110.0	30 bar	4
KH 112 iA DVGW	91	158	---	---	---	R/Rp 1 1/2"	38	121.0	30 bar	5
KH 20 iA DVGW	98	158	---	---	---	R/Rp 2"	49	140.5	25 bar	5

* for gas up to PN 5 bar/MOP 5, ** combi handles are found on page 281, *** not for combi handle size 3

Stainless steel ball valves, 2-piece, lightweight design, full bore — Eco-Line/PN 63

Materials: Housing: AISI 316, ball: AISI 316 seal: PTFE (15% GF), handle: AISI 304
Temperature range: -20°C to max. +200°C
Lockable hand lever, please order the padlocks separately (see page 641).
Operating range: Water, steam, oil, compressed air, fuels, solvents, aggressive media
☞ **Optional:** Certificate 3.1

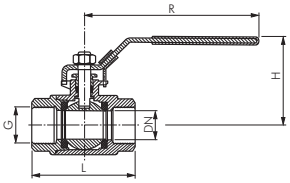

The pressure-temperature diagram is found in the Online Shop

Type	G	DN	L	H	R	PN
KH 14 K ES E	G 1/4"	11.5	50.0	54	101	63 bar
KH 38 K ES E	G 3/8"	12.5	50.0	54	101	63 bar
KH 12 K ES E	G 1/2"	15.0	59.0	54	101	63 bar
KH 34 K ES E	G 3/4"	20.0	66.0	63	124	63 bar
KH 10 K ES E	G 1"	25.0	75.5	74	124	63 bar
KH 114 K ES E	G 1 1/4"	32.0	88.7	80	165	63 bar
KH 112 K ES E	G 1 1/2"	38.0	98.5	94	165	63 bar
KH 20 K ES E	G 2"	50.0	120.6	103	183	63 bar
KH 212 K ES E	G 2 1/2"	63.0	146.5	137	248	63 bar
KH 30 K ES E	G 3"	76.0	167.5	148	248	63 bar

Stainless steel ball valves, 2-piece, full bore — Eco-Line/PN 63

Materials: Housing: AISI 316, ball AISI 316, seal: PTFE (15% GF), handle: AISI 304
Temperature range: -20° to max. + 200°C
Lockable hand lever, please order the padlocks separately (see page 641). Length according to DIN 3202-M3
Operating range: Water, steam, oil, compressed air, fuels, solvents, aggressive media
☞ **Optional:** Certificate 3.1

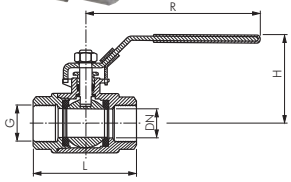

The pressure-temperature diagram is found in the Online Shop

Type	G	DN	L	H	R	PN
KH 14 ES E*	G 1/4"	11.5	55	48	102	63 bar
KH 38 ES E	G 3/8"	12.5	60	48	102	63 bar
KH 12 ES E	G 1/2"	15.0	75	51	102	63 bar
KH 34 ES E	G 3/4"	20.0	80	57	129	63 bar
KH 10 ES E	G 1"	25.0	90	63	129	63 bar
KH 114 ES E	G 1 1/4"	32.0	110	74	153	63 bar
KH 112 ES E	G 1 1/2"	38.0	120	81	153	63 bar
KH 20 ES E	G 2"	50.0	140	94	190	63 bar
KH 212 ES E	G 2 1/2"	63.0	185	130	247	63 bar
KH 30 ES E	G 3"	76.0	205	137	247	63 bar

* length not according to DIN

Stainless steel ball valves, 1-piece, reduced bore — PN 63

Materials: Housing: AISI 316, ball: AISI 316, seal: PTFE, handle: AISI 304
Temperature range: -20°C to max. +200°C
Operating range: Water, oil, compressed air, fuels, solvents, aggressive media
☞ **Optional:** NPT thread **-NPT**, certificate 3.1

Type (INOX)	G	DN	L	H	R	PN
KH 14 B ES	G 1/4"	5.0	39	33	71	63 bar
KH 38 B ES	G 3/8"	7.0	44	35	91	63 bar
KH 12 B ES	G 1/2"	9.2	55	40	95	63 bar
KH 34 B ES	G 3/4"	12.5	59	44	95	63 bar
KH 10 B ES	G 1"	15.0	69	60	113	63 bar
KH 114 B ES	G 1 1/4"	20.0	77	62	113	63 bar
KH 112 B ES	G 1 1/2"	25.0	81	64	141	63 bar
KH 20 B ES	G 2"	32.0	97	68	141	63 bar

☞ **Order example:** KH 14 B ES **
Standard type
Designation for the options:
NPT thread . . . . . **-NPT**

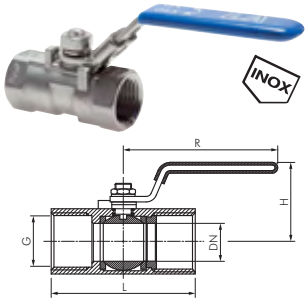

The pressure-temperature diagram is found in the Online Shop

Stainless steel ball valves, 2-piece, lightweight design, full bore — up to 63 bar

Materials: Housing: AISI 316, ball: AISI 316, seal: PTFE, handle: AISI 304
Temperature range: -20°C to max. +200°C
Lockable hand lever, please order the padlocks separately (see page 641).
Operating range: Water, oil, compressed air, fuels, solvents, aggressive media
☞ **Optional:** NPT thread **-NPT**, certificate 3.1

Type (INOX)	G	DN	L	H	R	PN
KH 14 K ES	G 1/4"	11.5	55.3	57	106	63 bar
KH 38 K ES	G 3/8"	12.5	55.3	57	106	63 bar
KH 12 K ES	G 1/2"	15.0	64.7	60	106	63 bar
KH 34 K ES	G 3/4"	20.0	73.4	68	124	63 bar
KH 10 K ES	G 1"	25.0	84.8	77	153	63 bar
KH 114 K ES*	G 1 1/4"	32.0	99.5	82	153	63 bar
KH 112 K ES*	G 1 1/2"	38.0	112.7	98	194	63 bar
KH 20 K ES*	G 2"	50.0	129.0	105	194	40 bar
KH 212 K ES*	G 2 1/2"	65.0	170.0	145	258	40 bar
KH 30 K ES*	G 3"	80.0	192.0	155	258	40 bar

* only for non-hazardous liquids of fluid group II

☞ **Order example:** KH 14 K ES **
Standard type
Designation for the options:
NPT thread . . . . . **-NPT**

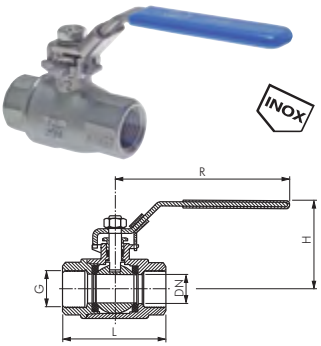

The pressure-temperature diagram is found in the Online Shop

Stainless steel ball valves, 2-piece, full bore — up to 130 bar

Materials: Housing: AISI 316, ball: AISI 316, seal: PTFE (15% GF), handle: AISI 304
Temperature range: -20°C to max. +200°C
Lockable hand lever, please order the padlocks separately (see page 641), length according to DIN 3202-M3
Operating range: Water, oil, compressed air, fuels, solvents, aggressive media
☞ **Optional:** Certificate 3.1

Type (INOX)	G	DN	L	H	R	PN
KH 14 ES*	G 1/4"	11.5	60	55	105	130 bar
KH 38 ES	G 3/8"	12.5	60	55	105	130 bar
KH 12 ES	G 1/2"	15.0	75	57	105	130 bar
KH 34 ES	G 3/4"	20.0	80	68	123	130 bar
KH 10 ES	G 1"	25.0	90	73	155	130 bar
KH 114 ES	G 1 1/4"	32.0	110	85	155	63 bar
KH 112 ES	G 1 1/2"	38.0	120	97	191	63 bar
KH 20 ES	G 2"	50.0	140	104	191	63 bar
KH 212 ES	G 2 1/2"	65.0	185	145	255	40 bar
KH 30 ES	G 3"	80.0	205	156	255	40 bar

* length not according to DIN

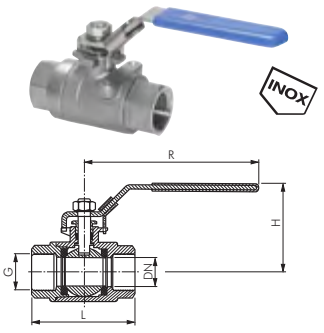

The pressure-temperature diagram is found in the Online Shop

Stainless steel ball valves, 2-piece, DVGW tested (PN 5/MOP 5) — up to 100 bar

Materials: Housing: AISI 316, ball: AISI 316, seal: PTFE, handle: AISI 304
Temperature range: -20°C to max. +150°C, gas: -20°C to max. +60°C
Assembly flange conforming to ISO 5211
Operating range: Water, oil, compressed air, vacuum (max. -0.9 bar), fuels, solvents, aggressive media, gases according to DVGW worksheet (e.g. natural gas, city gas, liquid gas up to 5 bar)
☞ **Optional:** Pneumatic actuator **-P**, electric actuator** **-E**, certificate 3.1

Type (INOX)	G	DN	L	H	R	PN*	ISO 5211
KH 38 DVGW ES	Rp 3/8"	10	55	52	110	100 bar	F 03
KH 12 DVGW ES	Rp 1/2"	15	65	55	110	100 bar	F 03
KH 34 DVGW ES	Rp 3/4"	20	70	66	140	100 bar	F 03
KH 10 DVGW ES	Rp 1"	25	85	70	140	100 bar	F 03
KH 114 DVGW ES	Rp 1 1/4"	32	95	85	180	64 bar	F 04
KH 112 DVGW ES	Rp 1 1/2"	40	105	91	180	64 bar	F 04
KH 20 DVGW ES	Rp 2"	50	125	105	230	40 bar	F 05

* for gas up to PN 4 bar

☞ **Order example:** KH 12 DVGW ES **
Standard type
Designation for the options:
Pneumatic actuator . . . . . **-P**
Electric actuator** . . . . . **-E**
** please specify the exact operating case

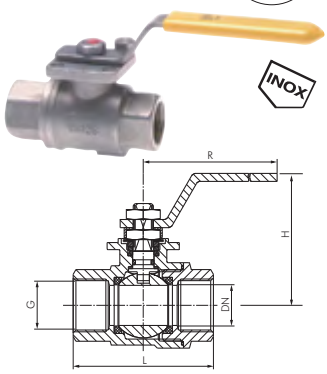

The pressure-temperature diagram is found in the Online Shop

Ball valves

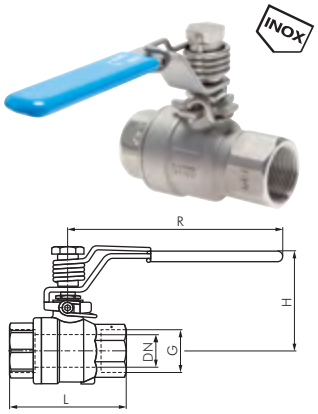

Stainless steel ball valves with spring return — PN 63

Materials: Housing: AISI 316, ball: AISI 316, seal: PTFE, handle and spring: AISI 304
Temperature range: -20°C to max. +180°C (dependent on operating pressure)
Length according to DIN 3202-M3
Operating range: Water, steam, oil, compressed air, vacuum (max. -0.9 bar), fuels, solvents, aggressive media
Function: In the basic setting the ball valve is in the closed position. It is opened against the spring force. When releasing the handle it jumps into the "Close" position. Closing should be supported manually (no quick shut-off valve).
☞ **Optional:** Certificate 3.1

Type (INOX)	G	DN	L	H	R	PN
KH 14 FS ES*	Rp 1/4"	10	60	51	103	63 bar
KH 38 FS ES	Rp 3/8"	12	60	51	103	63 bar
KH 12 FS ES	Rp 1/2"	15	75	53	103	63 bar
KH 34 FS ES	Rp 3/4"	20	80	60	123	63 bar
KH 10 FS ES	Rp 1"	25	90	73	158	63 bar
KH 114 FS ES	Rp 1 1/4"	32	110	79	158	63 bar
KH 112 FS ES	Rp 1 1/2"	38	120	90	190	63 bar
KH 20 FS ES	Rp 2"	50	140	99	190	63 bar

* length not according to DIN

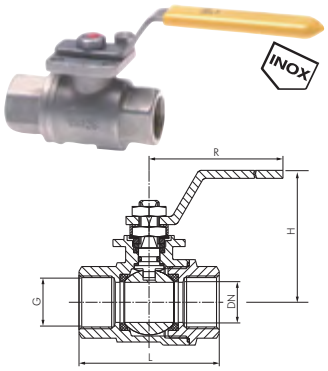

Stainless steel ball valves, 2-piece, for use in oxygen systems — PN 20

Materials: Housing: AISI 316, ball: AISI 316, seal: PTFE, handle: AISI 304
Temperature range: -20°C to max. +150°C
Assembly flange conforming to ISO 5211
Operating range: Oxygen (industrial), vacuum (max. -0.9 bar)
☞ **Optional:** Certificate 3.1
Delivery: This ball valve is delivered in a heat-sealed plastic bag.

Type (INOX)	G	DN	L	H	R	PN	ISO 5211
KH 38 SAU ES	Rp 3/8"	10	50	52	110	20 bar	F 03
KH 12 SAU ES	Rp 1/2"	15	60	55	110	20 bar	F 03
KH 34 SAU ES	Rp 3/4"	20	70	66	140	20 bar	F 03
KH 10 SAU ES	Rp 1"	25	85	70	140	20 bar	F 03
KH 114 SAU ES	Rp 1 1/4"	32	95	85	180	20 bar	F 04
KH 112 SAU ES	Rp 1 1/2"	40	105	91	180	20 bar	F 04
KH 20 SAU ES	Rp 2"	50	125	105	230	20 bar	F 05

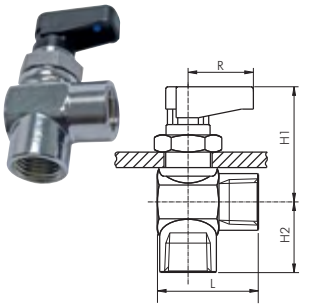

Angle ball valves with one-sided toggle grip, compact — PN 20

Materials: Body: Brass chrome-plated, ball: Brass chrome-plated, seal: PTFE/NBR
Temperature range: -20°C to max. +80°C
Operating range: Water (no steam), neutral, gaseous and non-aggressive, liquid media, mineral oils, compressed air, vacuum (max. -0.99 bar)
Switch panel mounting: Hole diameter: 14.5mm, sheet metal thickness: Max. 4.5mm

Type	G	DN	L	H1	H2	R
KHWC 18	G 1/8"	5	28.5	33.5	15.5	19
KHWC 14	G 1/4"	5	28.5	33.5	17.5	19
KHWC 38	G 3/8"	7	31.0	35.0	19.5	19

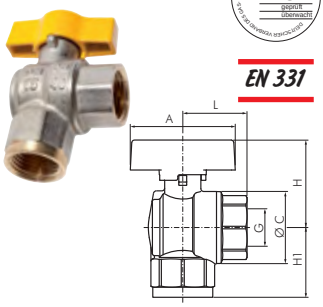

Angle ball valves, DVGW tested (PN 5/MOP 5) — PN 40

Materials: Housing: Brass nickel-plated, ball: Brass chrome-plated, seal: PTFE/NBR, handle: Aluminium
Temperature range: Liquid media -15°C to max. +100°C, gas: -20°C to max. +60°C
Operating range: Liquid and gaseous, neutral media, gases according to DVGW worksheet (e.g. natural gas, city gas, liquid gas up to 5 bar)

Type	G	DN	A	H	H1	L	ØC
KHW 12 B	Rp 1/2"	15	47	38	33	31	31
KHW 34 B	Rp 3/4"	20	56	46	38	35	39
KHW 10 B	Rp 1"	25	56	50	46	42	48

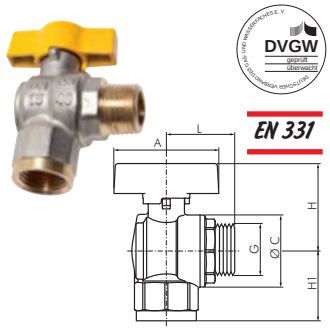

Screw-in angle ball valves, DVGW tested (PN 5/MOP 5) — PN 40

Materials: Housing: Brass nickel-plated, ball: Brass chrome-plated, seal: PTFE/NBR, handle: Aluminium
Temperature range: Liquid media -15°C to max. +100°C, gas: -20°C to max. +60°C
Operating range: Liquid and gaseous, neutral media, gases according to DVGW worksheet (e.g. natural gas, city gas, liquid gas up to 5 bar)

Type	G	DN	A	H	H1	L	ØC
KHW 12 B IA	R/Rp 1/2"	15	47	38	33	37	31
KHW 34 B IA	R/Rp 3/4"	20	56	46	38	43	39
KHW 10 B IA	R/Rp 1"	25	56	50	46	42	48

Ball valves with forced exhaust

Mini ball valves with forced exhaust — PN 20

Materials: Housing: Brass chrome-plated, ball: Brass chrome-plated, seal: PTFE/NBR
Temperature range: -20°C to max. +80°C
Operating range: For breathing and venting of compressed air systems, pressure gauges, etc. For the medium of air, water, vacuum (max. -0.99 bar)

Type	G	DN	L	H	R	Venting borehole
KH 18 MK ENTLEER	G 1/8"	5.5	35	21	19	2.5
KH 14 MK ENTLEER	G 1/4"	5.5	37	21	19	2.5
KH 38 MK ENTLEER	G 3/8"	8.0	42	22	19	3.0

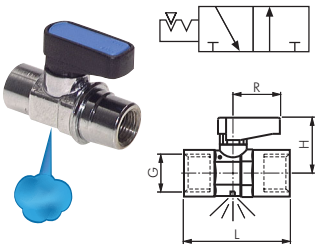

Ball valves, 2-piece, with forced exhaust (captured) — PN 14

Materials: Housing: Brass nickel-plated, ball: Brass hard chrome-plated, seal: PTFE, manufactured without silicone
Temperature range: -10°C to max. +100°C (dependent on operating pressure)
Lockable hand lever, please order the padlocks separately (see page 641).
Operating range: For breathing and venting of compressed air systems, pressure gauges, etc. For the medium of air, water, vacuum (max. -0.98 bar)

Type	G	Venting thread	DN	L	H	R	Matching silencer
KH 14 ENTLEER	G 1/4"	M 5	8	45	49	96	SD 50
KH 38 ENTLEER	G 3/8"	M 5	10	45	49	96	SD 50
KH 12 ENTLEER	G 1/2"	M 5	15	59	51	96	SD 50
KH 34 ENTLEER	G 3/4"	M 5	20	64	60	117	SD 50
KH 10 ENTLEER	G 1"	M 5	25	81	64	117	SD 50
KH 114 ENTLEER	G 1 1/4"	G 1/4"	32	93	80	157	SD 14
KH 112 ENTLEER	G 1 1/2"	G 1/4"	40	102	86	157	SD 14
KH 20 ENTLEER	G 2"	G 1/4"	50	121	93	157	SD 14

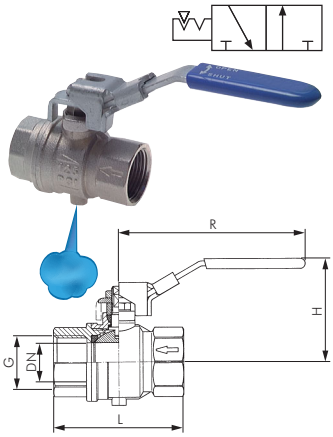

Stainless steel ball valves, 2-piece, with forced exhaust (captured) — PN 16

Materials: Housing: AISI 316, ball: AISI 316, seal: PTFE (15% GF)
Temperature range: -20°C to max. +200°C
Lockable hand lever, please order the padlocks separately (see page 641).
Operating range: For breathing and venting of compressed air systems, pressure gauges, etc. For the medium of air, water, vacuum (max. -0.98 bar)
☞ **Optional:** Certificate 3.1

Type (INOX)	G	Venting thread	DN	L	H	R	Matching silencer
KH 14 ENTLEER ES	G 1/4"	M 5	11	61	54	102	SD 50 ES
KH 38 ENTLEER ES	G 3/8"	M 5	12	61	54	102	SD 50 ES
KH 12 ENTLEER ES	G 1/2"	M 5	15	63	57	102	SD 50 ES
KH 34 ENTLEER ES	G 3/4"	M 5	20	77	62	124	SD 50 ES
KH 10 ENTLEER ES	G 1"	M 5	25	90	80	165	SD 50 ES
KH 114 ENTLEER ES	G 1 1/4"	M 5	32	100	84	165	SD 50 ES
KH 112 ENTLEER ES	G 1 1/2"	M 5	38	118	99	188	SD 50 ES
KH 20 ENTLEER ES	G 2"	M 5	50	138	107	188	SD 50 ES

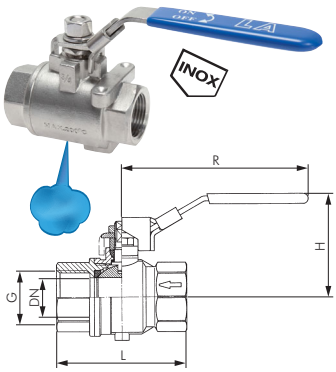

Manual slide valves brass nickel-plated — PN 10

Materials: Body: Brass nickel-plated, sliding sleeve: Aluminium anodised, seal: NBR, manufactured without silicone
Temperature range: -10°C to max. +80°C
Operating range: For breathing and venting of compressed air systems, e.g. in front of an air unit or for the activation of single acting pneumatic cylinders.

Type	G	L	DN	Additional locks
Standard				
HS 50	M 5	31	4	---
HS 18	G 1/8"	48	7	---
HS 14	G 1/4"	58	10	---
HS 38	G 3/8"	70	13	---
HS 12	G 1/2"	75	16	---
HS 34	G 3/4"	83	19	---
Safety design: can be locked open and closed with up to 3 padlocks*				
HS 14 Si	G 1/4"	46	10	VHS 20 H
HS 12 Si	G 1/2"	62	16	VHS 20 H

* a padlock is included in the supply volume

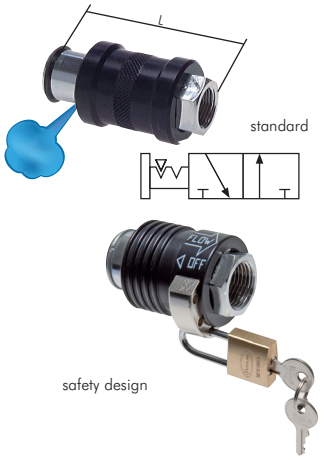

3/2-way valves with push-in fittings — Standard

Operating pressure: -0.95 to 10 bar
Temperature range: 0°C to max. +60°C

Type	D
IQSH 360	6
IQSH 380	8
IQSH 3100	10
IQSH 3120	12

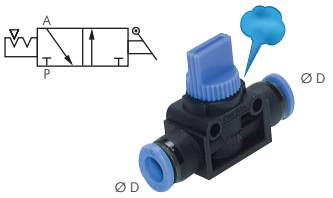

Mini ball valves

EN 331

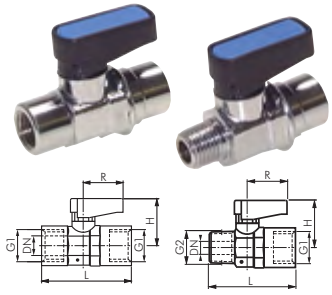

Mini ball valves with toggle handle on one side, compact — PN 20

Materials: Housing: Brass chrome-plated, ball: Brass chrome-plated, seal: PTFE/NBR
Temperature range: -20°C to max. +80°C
Operating range: Water (no steam), neutral, gaseous and non-aggressive, liquid media, mineral oils, compressed air, vacuum (max. -0.99 bar)

Type **thread female**	L	Type **thread female/male**	L	G1	G2	DN	H	R
KH 18 MKC	36	KH 18 MKiAC	36	Rp 1/8"	R 1/8"	5.5	21	19
KH 14 MKC	43	KH 14 MKiAC	41	Rp 1/4"	R 1/4"	5.5	21	19
KH 38 MKC	47	KH 38 MKiAC	46	Rp 3/8"	R 3/8"	8.0	22	19
KH 12 MKC	59	KH 12 MKiAC	57	Rp 1/2"	R 1/2"	10.0	31	26

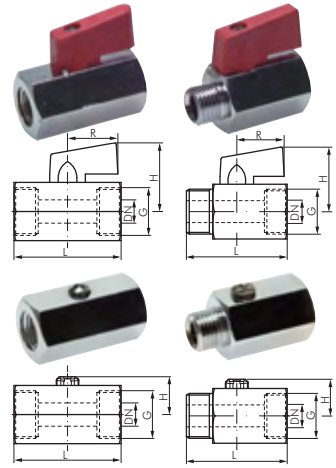

Mini ball valves with toggle handle on one side/screwdriver actuation — PN 15

Materials: Housing: Brass chrome-plated, ball: Brass hard chrome-plated, seal: PTFE/NBR
Temperature range: 0°C to max. +90°C
Operating range: Water (no steam), neutral, gaseous and non-aggressive, liquid media, mineral oils, compressed air, vacuum (max. -0.9 bar)

Type **thread female**	L	Type **thread female/male**	L	G	DN	H	R
Toggle grip							
KH 18 MK	40	KH 18 MKiA	39	G 1/8"	6	27.5	22
KH 14 MK	40	KH 14 MKiA	39	G 1/4"	8	27.5	22
KH 38 MK	40	KH 38 MKiA	40	G 3/8"	8	27.5	22
KH 12 MK	46	KH 12 MKiA	45	G 1/2"	10	29.5	22
KH 34 MK	54	KH 34 MKiA	51	G 3/4"	12	32.0	22
Screwdriver actuation							
KH 18 MK-S	40	KH 18 MKiA-S	39	G 1/8"	6	23.0	22
KH 14 MK-S	39	KH 14 MKiA-S	39	G 1/4"	8	23.0	22
KH 38 MK-S	42	KH 38 MKiA-S	40	G 3/8"	8	23.0	22
KH 12 MK-S	47	KH 12 MKiA-S	45	G 1/2"	10	27.5	22

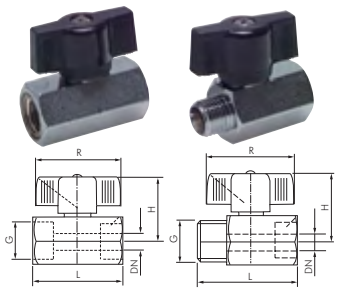

Mini ball valves with butterfly handle — PN 15*

Materials: Housing: Brass chrome-plated, ball: Brass hard chrome-plated, seal: PTFE/FKM, manufactured silicone-free
Temperature range: -20°C to max. +90°C
Operating range: Water (no steam), neutral, gaseous and non-aggressive, liquid media, mineral oils, compressed air, vacuum (max. -0.98 bar)

Type **thread female**	Type **thread female/male**	L	G	DN	H	R
KH 18 MKHE	KH 18 MKiAHE	41.5	G 1/8"	6	31.5	39
KH 14 MKHE	KH 14 MKiAHE	41.5	G 1/4"	8	31.5	39
KH 38 MKHE	KH 38 MKiAHE	41.5	G 3/8"	8	31.5	39
KH 12 MKHE	KH 12 MKiAHE	49.0	G 1/2"	10	33.0	39

* max. operating pressure depends on the temperature: up to 30°C = 15 bar, up to 60°C = 11 bar, up to 90°C = 7.5 bar

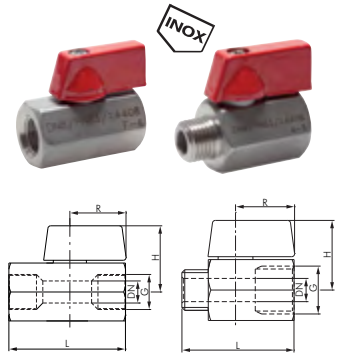

Stainless steel mini ball valves with toggle handle on one side — Eco-Line/PN 63

Materials: Housing: AISI 316, ball: AISI 316, handle screw: AISI 304, seal: PTFE/FKM, handle: Zinc die-casting
Temperature range: -20°C to max. +200°C
Operating range: Water, oil, compressed air, fuels, solvents, aggressive media
☞ **Optional:** Certificate 3.1

Type **thread female** INOX	Type **thread female/male** INOX	L	G	DN	H	R
KH 18 MK ES E	KH 18 MKiA ES E	39	G 1/8"	5	27	22
KH 14 MK ES E	KH 14 MKiA ES E	39	G 1/4"	7	27	22
KH 38 MK ES E	KH 38 MKiA ES E	39	G 3/8"	7	27	22
KH 12 MK ES E	KH 12 MKiA ES E	50	G 1/2"	9	28	22

Mini ball valves with long handles — PN 15*

Materials: Housing: Brass chrome-plated, ball: Brass hard chrome-plated, seal: PTFE/FKM, manufactured silicone-free
Temperature range: -20°C to max. +90°C
Operating range: Water (no steam), neutral, gaseous and non-aggressive, liquid media, mineral oils, compressed air, vacuum (max. -0.98 bar)

Type thread female	Type thread female/male	G	DN	L	H	R
KH 18 M	KH 18 MiA	G 1/8"	6	41.5	30.5	72
KH 14 M	KH 14 MiA	G 1/4"	8	41.5	30.5	72
KH 38 M	KH 38 MiA	G 3/8"	8	41.5	30.5	72
KH 12 M	KH 12 MiA	G 1/2"	10	49	32.5	72

* max. operating pressure depends on the temperature: up to 30°C = 15 bar, up to 60°C = 11 bar, up to 90°C = 7.5 bar

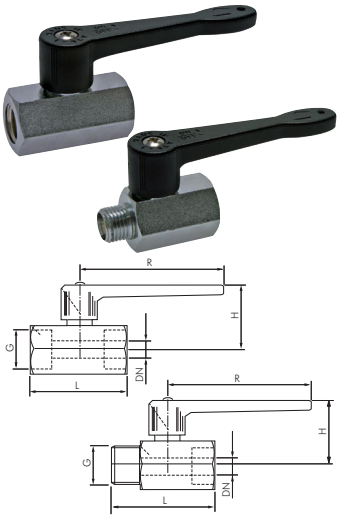

Ball valves with fixing threads — PN 40

Materials: Housing: Brass nickel-plated, ball: Brass polished, seal: PA/NBR
Temperature range: -20°C to max. +80°C

Type	G	DN	L	H	H1	R	Fixing thread
KH 6402 18	G 1/8"	4	44	30	18	48	M 4
KH 6402 14	G 1/4"	7	53	31	24	48	M 5
KH 6402 38	G 3/8"	10	59	45	30	69	M 5
KH 6402 12	G 1/2"	13	67	47	34	69	M 6
KH 6402 34	G 3/4"	20	80	52	44	108	M 8
KH 6402 10	G 1"	23	94	56	53	108	M 8

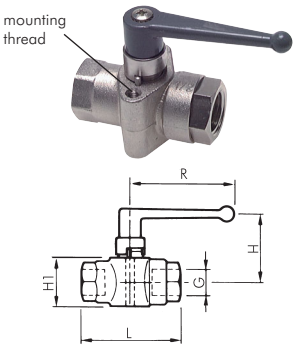

Ball valves with fixing threads — PN 20

Materials: Housing: Brass nickel-plated, ball: Brass polished, seal: PA/NBR
Temperature range: -20°C to max. +80°C
Switch panel mounting: Hole diameter 20.5 mm (16.5 mm for the 1/8" design)

Type	G	DN	L	H	R	D max.
KH 18 S MSV	G 1/8"	4	44	37	48	3
KH 14 S MSV	G 1/4"	7	53	45	48	5
KH 38 S MSV	G 3/8"	10	59	50	69	5
KH 12 S MSV	G 1/2"	13	67	51	69	5

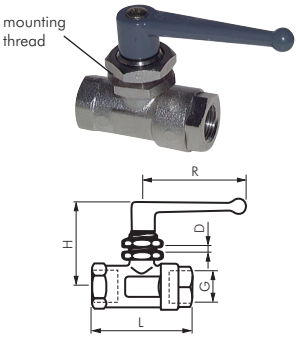

KFE ball valves — PN 10

Description: Boiler filling and draining ball valves for filling heating systems
Materials: Housing: Brass nickel-plated, ball: Brass hard chrome-plated, seal: PTFE/NBR
Temperature range: -10°C to max. +90°C
Operating range: Water (no steam), neutral, non-aggressive, non-toxic liquid media

Type	G	D	DN	L	E	R
KH 12 KFE	G 1/2"	14.5*	10	77	13	33

* suitable for 13 mm water hose

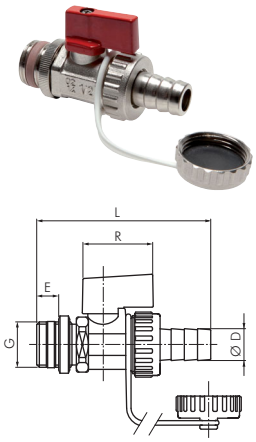

Welding ball valves/discharge valves

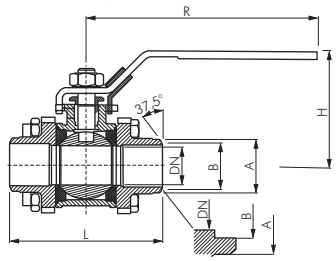

The pressure-temperature diagram is found in our Online Shop.

Stainless steel ball valves, 3-piece, full bore & welding ends — *Eco-Line/PN 63*

Materials: Housing: AISI 316, ball: AISI 316, seal: PTFE (15% GF), handle: AISI 304
Temperature range: -20°C to max. +200°C
Length according to DIN 3202-S13, assembly flange according to ISO 5211, lockable hand lever, please order padlocks separately (see page 641).
Operating range: Water, oil, compressed air, fuels, solvents, aggressive media
☞ **Optional:** Certificate 3.1

Type (INOX)	DN	L	A	B	H	R	PN	ISO 5211
KH 143 AS ES E	9.3	70	13.7	10.2	58	104	63 bar	F 03
KH 383 AS ES E	12.5	70	17.2	12.5	58	104	63 bar	F 03
KH 123 AS ES E	15.0	75	21.3	15.7	62	104	63 bar	F 03
KH 343 AS ES E	20.0	90	26.9	21.0	65	121	63 bar	F 03
KH 103 AS ES E	25.0	100	33.7	26.8	80	147	63 bar	F 04
KH 1143 AS ES E	32.0	110	42.4	35.1	85	147	63 bar	F 04
KH 1123 AS ES E	38.0	125	48.3	40.5	104	188	63 bar	F 05
KH 203 AS ES E	50.0	150	60.3	52.3	111	188	63 bar	F 05
KH 2123 AS ES E	63.0	190	76.1	62.5	138	250	63 bar	F 07
KH 303 AS ES E	76.0	220	88.9	77.5	146	250	63 bar	F 07
KH 403 AS ES E	96.0	270	114.3	102.3	190	318	63 bar	F 10

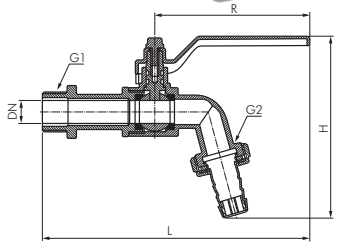

Ball discharge valves — *up to 15 bar*

Materials: Housing: Brass nickel-plated, ball: Brass hard chrome-plated, seal: PTFE/NBR
Temperature range: -20°C to max. +80°C
Operating range: Water (no steam), neutral, gaseous and non-aggressive, liquid media, mineral oils, compressed air, vacuum (max. -0.9 bar)

Type	G 1	G2	D	DN	L	H	R	PN	Combi handle size*
KHA 38	G 3/8"	G 3/4"	14.5	10	134.0	93	80.0	15 bar	1
KHA 12	G 1/2"	G 3/4"	14.5	12	137.0	93	80.0	15 bar	1
KHA 34	G 3/4"	G 1"	20.0	12	148.5	108	88.5	15 bar	2
KHA 10	G 1"	G 1 1/4"	26.0	15	158.0	126	88.5	12 bar	2

* combi handles can be found on page 281.

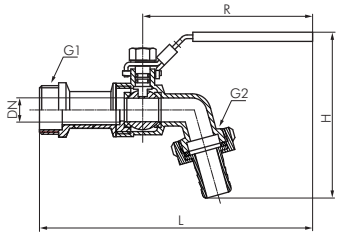

Stainless steel ball discharge valves — *Eco-Line/PN 16*

Materials: Housing: AISI 316, ball: AISI 316, handle: AISI 304, seal: PTFE/NBR
Temperature range: -10°C to max. +150°C
Lockable hand lever, please order the padlocks separately (see page 641).
Operating range: Water, oil, fuels, compressed air, solvents
☞ **Optional:** Certificate 3.1

Type (INOX)	G1	G2	D	DN	L	H	R
KHA 12 ES E	G 1/2"	G 3/4"	13.0	9	145	87	92.0
KHA 34 ES E	G 3/4"	G 3/4"	16.0	13	155	87	92.0
KHA 10 ES E	G 1"	G 1"	27.5	15	185	120	115.0

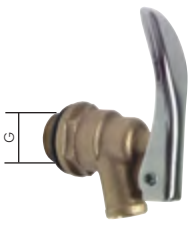

Barrel taps self-sealing (with spring force) made of brass

Materials: Body: Brass, seal: NBR
Temperature range: 0°C to max. +75°C
Operating ranges: Petrochemical liquids

Type	G	DN	Discharge Ø internal
KHFA 34 MS	G 3/4" (MT)	10	15

Drain cocks made of plastic — PN 2

Materials: Housing: Polypropylene, seals: PTFE, wetted parts: PP, PE & PTFE
Temperature range: +5°C to max. +40°C
Operating ranges: Beverages, food, water, oil, chemicals*

Advantages: • Absolutely tight seal, the rotatable union nut connection guarantees a perpendicular position of the cock. The rotatable discharge prevents subsequent dripping of medium. The reduction-discharge nozzles enclosed with delivery allows bottles to be filled.

Type	G	DN	L	Discharge
KHAF 34 PP	G ¾" (FT)	12	120	Ø 6 or Ø 20

* please use our resistance recommendations in our Online Shop.

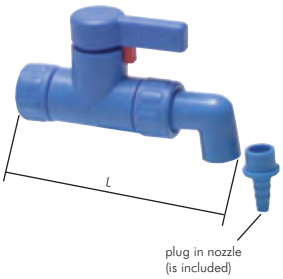

Drain ball valves made of plastic — PN 4

Materials: Housing and ball: Polypropylene, seals: PTFE, wetted parts: PP, PE & PTFE
Temperature range: +5°C to max. +80°C
Pressure range: 4 bar at +20°C
Operating ranges: Food, water, oil, chemicals (also suitable for crystallizing materials)*

Advantages: • The rotatable union nut connection guarantees a vertical position of the valve.

Type	G	DN	L	H	R	Discharge standard	Discharge with nozzle
KHA 34 PP	G ¾" (FT)	20	155	78	55	¾" (MT)	Ø 16

* please use our resistance recommendations in our Online Shop.

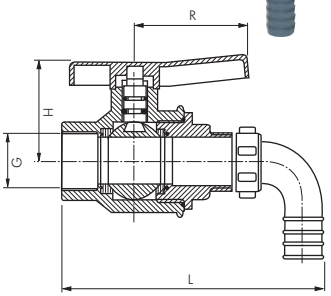

Barrel adapters for drain cocks

Materials: Polyethylene and polypropylene
Temperature range: 0°C to max. +80°C

Type	G	For tank connection with	Thread Ø	Thread pitch	Figure
KHFARN 2034	R ¾" (MT)	Fine thread 2"	59.5	2.1	1
KHFARN 2034 M	R ¾" (MT)	Coarse thread Mauser® 2"	69.0	5.9	2
KHFARN 2034 T	R ¾" (MT)	Coarse thread Tri-Sure® 2"	56.3	3.9	3

Adapters (industrial quality) for IBC-Container

Materials: Body: Polypropylene, seals: Santoprene (S60 seal: PE elastomer)
Temperature range: -18°C to max. +60°C

Type	G	Container connection	Thread pitch S	Figure	Replace. parts seals
KHFAiBC 2060	G 2" (FT)	S60x6 (FT)	6	1	KHFAiBC 2060 Di
KHFAiBC 2075	G 2" (MT)	S75x6 (FT)	6	2	KHFAiBC 2075 Di
KHFAiBC 20100	G 2" (FT)	S100x8 (FT)	8	3	KHFAiBC 20100 Di

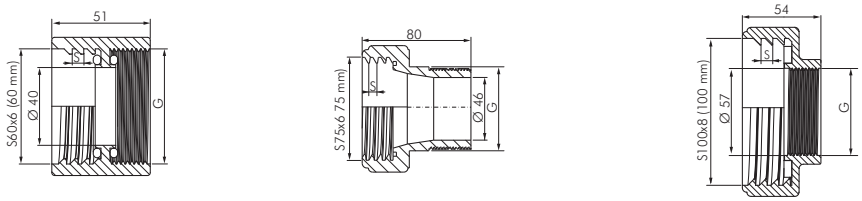

Drain cocks for plastic canisters

Materials: Body: PE, lever: PP, seal EPE (PE foam)

Type	Thread female	For canister threads male Ø	Thread pitch
KHA DIN45	DIN 45 (Ø internal: 41.0 mm)	44.6	4
KHA DIN51	DIN 51 (Ø internal: 50.2 mm)	54.8	5
KHA DIN61	DIN 61 (Ø internal: 55.6 mm)	60.5	6

High pressure ball valves

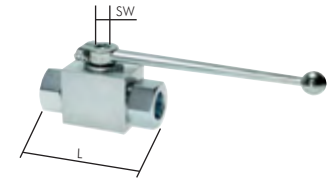

G 1/8" - G 1 1/4"

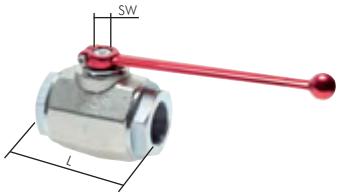

G 1 1/2" - G 2"

Replacement handles

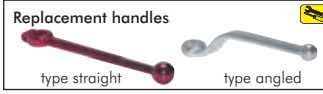

High pressure ball valves — up to 500 bar

Materials: Housing: Zinc-plated steel, ball: Steel hard chrome-plated, seal: POM/NBR, handle: Zinc die-casting (from DN 20: straight - aluminium, angled - zinc-plated steel)
Temperature range: -10°C to max. +80°C
Operating range: Hydraulic oil, heating oil (water only after release by us)
☞ **Optional:** NPT thread **-NPT**

Type	Thread	DN	L	SW	PN	Replace. handles straight	Replace. handles angled
KH 18 HD	G 1/8"	4	69	9	500 bar	G KH SW 9	G KH SW 9 GK
KH 14 HD	G 1/4"	6	69	9	500 bar	G KH SW 9	G KH SW 9 GK
KH 38 HD	G 3/8"	10	72	9	500 bar	G KH SW 9	G KH SW 9 GK
KH 12 HD	G 1/2"	13	84	9	500 bar	G KH SW 9	G KH SW 9 GK
KH 34 HD	G 3/4"	20	95	14	315 bar	G KH SW 14	G KH SW 14 GK
KH 10 HD	G 1"	25	113	14	315 bar	G KH SW 14	G KH SW 14 GK
KH 114 HD	G 1 1/4"	25	120	14	315 bar	G KH SW 14	G KH SW 14 GK
KH 112 HD	G 1 1/2"	40	130	17	315 bar	G KH SW 17	G KH SW 17 GK
KH 20 HD	G 2"	50	140	17	315 bar	G KH SW 17	G KH SW 17 GK

☞ **Order example:** KH 18 HD **
Standard type
Designation for the options:
NPT thread . . . . . **-NPT**

Stainless steel high pressure ball valves — up to 500 bar

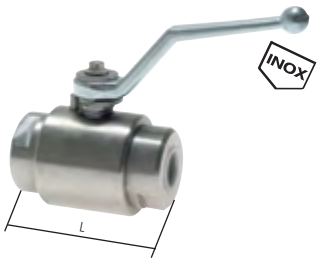

Materials: Housing: AISI 316L, ball: AISI 316L, sealing housing: POM, seals: PTFE/NBR, handle: Zinc-plated steel
Temperature range: -30°C to max. +100°C
Operating range: Hydraulic oil, heating oil (water only after release by us)
☞ **Optional:** NPT thread **-NPT**

Type (INOX)	Thread	DN	L	PN
KH 14 HD B ES	G 1/4"	6	72	500 bar
KH 38 HD B ES	G 3/8"	10	72	500 bar
KH 12 HD B ES	G 1/2"	13	81	500 bar
KH 34 HD B ES	G 3/4"	20	98	400 bar
KH 10 HD B ES	G 1"	25	106	350 bar
KH 114 HD B ES	G 1 1/4"	32	127	350 bar
KH 112 HD B ES	G 1 1/2"	40	135	350 bar
KH 20 HD B ES	G 2"	50	160	350 bar
KH 212 HD B ES	G 2 1/2"	65	174	150 bar
KH 30 HD B ES	G 3"	80	192	100 bar
KH 40 HD B ES	G 4"	100	230	50 bar

☞ **Order example:** KH 14 HD B ES **
Standard type
Designation for the options:
NPT thread . . . . . **-NPT**

Stainless steel high pressure ball valves — up to 500 bar

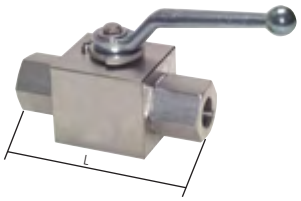

Materials: Housing: AISI 316Ti, ball: AISI 316Ti, sealing housing: POM, seals: PTFE/FKM, handle: AISI 316Ti
Temperature range: -30°C to max. +100°C, (option **-PEE**: -30°C to max. +180°C)
Operating range: Hydraulic oil, heating oil (water only after release by us)
☞ **Optional:** PEEK sealing housing **-PEE**

Type (INOX)	Thread	DN	L	PN
KH 18 HD ES	G 1/8"	5	69	500 bar
KH 14 HD ES	G 1/4"	6	69	500 bar
KH 38 HD ES	G 3/8"	10	72	500 bar
KH 12 HD ES	G 1/2"	13	83	500 bar
KH 34 HD ES	G 3/4"	20	95	315 bar
KH 10 HD ES	G 1"	25	113	315 bar

☞ **Order example:** KH 18 HD ES **
Standard type
Designation for the options:
PEEK sealing housing . . . . . **-PEE**

High pressure ball valves with cutting ring connections ISO 8434-1 up to 500 bar

Materials: Housing: Zinc-plated steel, ball: Steel hard chrome-plated, seal: POM/NBR, handle: Zinc die-casting (from DN 20: straight - aluminium, angled - zinc-plated steel)
Temperature range: -10°C to max. +80°C
Operating range: Hydraulic oil, heating oil (water only after release by us)

Type	Thread male	DN	L	SW	Tube Ø external	PN	Replace. handles straight	Replace. handles angled
Light model series								
KH 6 L HD	M 12 x 1.5	4	67	9	6 L	315 bar	G KH SW 9	G KH SW 9 GK
KH 8 L HD	M 14 x 1.5	6	67	9	8 L	315 bar	G KH SW 9	G KH SW 9 GK
KH 10 L HD	M 16 x 1.5	8	74	9	10 L	315 bar	G KH SW 9	G KH SW 9 GK
KH 12 L HD	M 18 x 1.5	10	74	9	12 L	315 bar	G KH SW 9	G KH SW 9 GK
KH 15 L HD	M 22 x 1.5	13	82	9	15 L	315 bar	G KH SW 9	G KH SW 9 GK
KH 18 L HD	M 26 x 1.5	13	82	9	18 L	315 bar	G KH SW 9	G KH SW 9 GK
KH 22 L HD	M 30 x 2	20	101	14	22 L	160 bar	G KH SW 14	G KH SW 14 GK
KH 28 L HD	M 36 x 2	25	108	14	28 L	160 bar	G KH SW 14	G KH SW 14 GK
KH 35 L HD	M 45 x 2	25	112	14	35 L	160 bar	G KH SW 14	G KH SW 14 GK
KH 42 L HD	M 52 x 2	25	114	14	42 L	160 bar	G KH SW 14	G KH SW 14 GK
Heavy model series								
KH 8 S HD	M 16 x 1.5	4	73	9	8 S	500 bar	G KH SW 9	G KH SW 9 GK
KH 10 S HD	M 18 x 1.5	6	73	9	10 S	500 bar	G KH SW 9	G KH SW 9 GK
KH 12 S HD	M 20 x 1.5	8	76	9	12 S	500 bar	G KH SW 9	G KH SW 9 GK
KH 14 S HD	M 22 x 1.5	10	80	9	14 S	500 bar	G KH SW 9	G KH SW 9 GK
KH 16 S HD	M 24 x 1.5	13	86	9	16 S	500 bar	G KH SW 9	G KH SW 9 GK
KH 20 S HD	M 30 x 2	13	90	9	20 S	500 bar	G KH SW 9	G KH SW 9 GK
KH 25 S HD	M 36 x 2	20	109	14	25 S	315 bar	G KH SW 14	G KH SW 14 GK
KH 30 S HD	M 42 x 2	25	120	14	30 S	315 bar	G KH SW 14	G KH SW 14 GK
KH 38 S HD	M 52 x 2	25	124	14	38 S	315 bar	G KH SW 14	G KH SW 14 GK

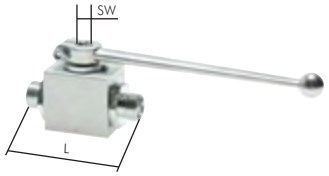

Stainless steel high press. ball valves, cutting ring connections ISO 8434-1 up to 500 bar

Materials: Housing: AISI 316Ti, ball: AISI 316Ti, sealing housing: POM, seals: PTFE/FKM, handle: AISI 316Ti
Temperature range: -30°C to max. +100°C
Operating range: Hydraulic oil, heating oil (water only after release by us)

Type (INOX)	Thread male	DN	L	Tube Ø external	PN
Light model series					
KH 6 L HD ES	M 12 x 1.5	5	67	6 L	315 bar
KH 8 L HD ES	M 14 x 1.5	6	67	8 L	315 bar
KH 10 L HD ES	M 16 x 1.5	8	74	10 L	315 bar
KH 12 L HD ES	M 18 x 1.5	10	74	12 L	315 bar
KH 15 L HD ES	M 22 x 1.5	13	82	15 L	315 bar
KH 18 L HD ES	M 26 x 1.5	13	82	18 L	315 bar
KH 22 L HD ES	M 30 x 2	20	101	22 L	160 bar
KH 28 L HD ES	M 36 x 2	25	108	28 L	160 bar
Heavy model series					
KH 8 S HD ES	M 16 x 1.5	5	73	8 S	500 bar
KH 10 S HD ES	M 18 x 1.5	6	73	10 S	500 bar
KH 12 S HD ES	M 20 x 1.5	8	76	12 S	500 bar
KH 16 S HD ES	M 24 x 1.5	13	86	16 S	400 bar
KH 20 S HD ES	M 30 x 2	13	90	20 S	400 bar
KH 25 S HD ES	M 36 x 2	20	109	25 S	315 bar
KH 30 S HD ES	M 42 x 2	25	120	30 S	315 bar

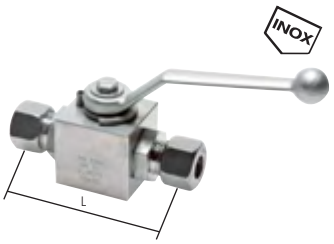

Shut-off valves

Needle shut-off valves with bulkhead threads for panel mounting — PN 18

Materials: Housing: Brass nickel-plated, seal: NBR
Temperature range: -10°C to max. +80°C
Switch panel mounting: For borehole diameter Ø 14.5 mm

Type	Thread	DN	L	H	E_{max}
NADEL 18 MSV	G 1/8"	4	51.6	64	3
NADEL 14 MSV	G 1/4"	4	57.0	64	3
NADEL 38 MSV	G 3/8"	8	63.0	90	10
NADEL 12 MSV	G 1/2"	8	69.0	90	10

Stainless steel needle shut-off valves — ★★☆☆☆ Eco-Line PN 300

Materials: Housing AISI 316, handle: AISI 304, seal: PTFE (on the spindle)
Temperature range: -20°C to max. +200°C

Type INOX	Thread	DN	L	H	KV value*
NADEL 18 ES E	G 1/8"	2.5	48	77	8.0 l/min
NADEL 14 ES E	G 1/4"	3.5	56	80	11.5 l/min
NADEL 38 ES E	G 3/8"	3.5	56	80	13.5 l/min
NADEL 12 ES E	G 1/2"	4.8	66	89	18.0 l/min
NADEL 34 ES E	G 3/4"	6.4	66	93	21.0 l/min
NADEL 10 ES E	G 1"	9.5	80	108	24.0 l/min

* water flow rate at +20°C, 1 bar pressure at the valve inlet, free discharge.
air flow [l/min] ≈ 13.4 · Kv · P_{input}, if $P_{output} < \frac{P_{input}}{2}$ (P_{input} and P_{output} are absolute values in bar.)

Needle shut-off valves with hand wheels — ★★★★★ up to 400 bar

Materials: Housing: Zinc-pl. steel or stainl. steel AISI 316Ti, seal: Graphite (type AISI 316Ti: PTFE), hand wheel: Pressed plastic
Temperature range: -30°C to max. +350°C (type AISI 316Ti: -30°C to max. +250°C)

Type zinc-plated steel	Type AISI 316Ti INOX	Thread	DN	L	KV value*	PN
NADEL 18 HR	NADEL 18 HR ES	G 1/8"	4	45	4 l/min	400 bar
NADEL 14 HR	NADEL 14 HR ES	G 1/4"	5	55	8 l/min	400 bar
NADEL 38 HR	NADEL 38 HR ES	G 3/8"	6	55	10 l/min	400 bar
NADEL 12 HR	NADEL 12 HR ES	G 1/2"	7	60	12 l/min	400 bar
NADEL 34 HR	NADEL 34 HR ES	G 3/4"	9	75	18 l/min	200 bar
NADEL 10 HR	NADEL 10 HR ES	G 1"	12	100	32 l/min	200 bar
NADEL 114 HR	NADEL 114 HR ES	G 1 1/4"	15	110	60 l/min	160 bar
NADEL 112 HR	NADEL 112 HR ES	G 1 1/2"	22	130	115 l/min	120 bar
NADEL 20 HR	NADEL 20 HR ES	G 2"	22	130	130 l/min	120 bar

* water flow rate at +20°C, 1 bar pressure at the valve inlet, free discharge.
air flow [l/min] ≈ 13.4 · Kv · P_{input}, if $P_{output} < \frac{P_{input}}{2}$ (P_{input} and P_{output} are absolute values in bar.)

Needle shut-off valves — up to 100 bar

Materials: Housing: Brass, seal: NBR (3/4"- 2": PTFE)
Temperature range: -30°C to max. +110°C (G 1/8": -10°C to max. +60°C)

Type **FT/FT**	Type **MT/MT**	Thread	DN	L	KV value*	PN
NADEL 18	---	G 1/8"	4	36	---	15 bar
NADEL 14	NADEL 14 A	G 1/4"	4	42	---	40 bar
NADEL 38	NADEL 38 A	G 3/8"	7	50	---	40 bar
NADEL 12	---	G 1/2"	11	64	---	40 bar
NADEL 34	---	G 3/4"	9	67	18 l/min	100 bar
NADEL 10	---	G 1"	11	75	28 l/min	100 bar
NADEL 114	---	G 1 1/4"	13	110	42 l/min	100 bar
NADEL 112	---	G 1 1/2"	15	110	60 l/min	100 bar
NADEL 20	---	G 2"	15	110	60 l/min	100 bar

* water flow rate at +20°C, 1 bar pressure at the valve inlet, free discharge.
air flow [l/min] ≈ 13.4 · Kv · P_{input}, if $P_{output} < \frac{P_{input}}{2}$ (P_{input} and P_{output} are absolute values in bar.)

Ball shut-off valves — PN 40

Materials: Housing: Hot-pressed brass, handle: Plastic, seal: NBR, valve seat with metal sealing
Temperature range: -30°C to max. +110°C

Type **angle**	Old order number	Type **straight**	Thread	DN
ASVW 18	ECK 18	ASVG 18	G 1/8"	4.0
ASVW 14	ECK 14	ASVG 14	G 1/4"	5.5
ASVW 38	ECK 38	ASVG 38	G 3/8"	8.0
---	---	ASVG 12	G 1/2"	11.0

Sleeve shut-off valves — Eco-Line/PN 10

Materials: Housing and top part: Brass, sealing seat: NBR
Temperature range: 0°C to max. +80°C
Operating range: Water, compressed air

Type	G	DN	L	H	R
MUA 12 E	G 1/2"	16	54.5	78	58
MUA 34 E	G 3/4"	16	54.5	78	58
MUA 10 E	G 1"	16	61.0	82	58
MUA 114 E	G 1 1/4"	32	88.5	126	79
MUA 112 E	G 1 1/2"	38	101.0	128	79
MUA 20 E	G 2"	51	117.0	149	85

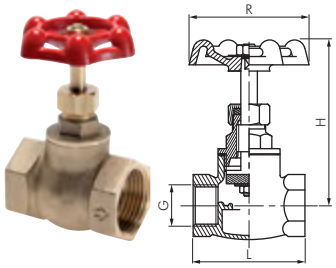

Sleeve shut-off valves — PN 16

Materials: Housing: Red bronze, top part: Brass, sealing seat: PTFE
Temperature range: Water: 0°C to max. +100°C, saturated steam: 7 bar, to max. +170°C
Operating range: Liquids, air, heating and hydraulic oils, fuels and water

Type	G	DN	L	H	R
MUA 12	G 1/2"	12.5	50	77.5	55
MUA 34	G 3/4"	16.0	60	89.0	60
MUA 10	G 1"	21.5	70	98.5	65
MUA 114	G 1 1/4"	26.5	85	112.7	65
MUA 112	G 1 1/2"	32.0	90	133.0	75
MUA 20	G 2"	41.0	110	141.0	80
MUA 212	G 2 1/2"	58.0	135	208.0	120
MUA 30	G 3"	65.0	148	234.5	120
MUA 40	G 4"	94.5	190	288.0	175

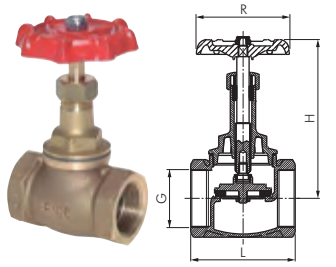

Stainless steel sleeve shut-off valves — Eco-Line/PN 14

Materials: Housing: AISI 316, seal spindle: PTFE, sealing seat: Metallic sealing, hand wheel: Aluminium
Temperature range: -20°C to max. +200°C
Operating range: Liquids, gases, air, heating and hydraulic oils, fuels and water, chemicals
☞ **Optional:** Certificate 3.1

Type (INOX)	G	DN	L	H	R	Repl. handwheel
MUA 38 ES E	G 3/8"	10	52	103	70	MUA 38 ES E RAD
MUA 12 ES E	G 1/2"	14	52	103	70	MUA 12 ES E RAD
MUA 34 ES E	G 3/4"	17	66	111	80	MUA 34 ES E RAD
MUA 10 ES E	G 1"	23	76	121	80	MUA 10 ES E RAD
MUA 114 ES E	G 1 1/4"	30	86	156	90	MUA 114 ES E RAD
MUA 112 ES E	G 1 1/2"	30	94	147	90	MUA 112 ES E RAD
MUA 20 ES E	G 2"	43	118	175	100	MUA 20 ES E RAD
MUA 212 ES E	G 2 1/2"	59	150	200	140	MUA 212 ES E RAD

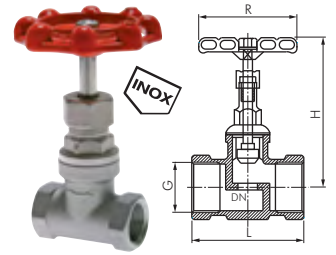

Swing sleeve shut-off valves (free flow valves), DVGW tested — PN 10*

Materials: Housing and top part: Brass, seal, spindle and sealing seat: EPDM, hand wheel: Polyamide glass fibre reinforced
Temperature range: 0°C to max. +90°C
Operating range: Water, drinking water, neutral liquids

✓ **Advantages:** • Up to G 2" design without any dead space

Type	G	DN	L	H	R	Repl. handwheel
MUA 12 SS	Rp 1/2"	15	65	108	50	MUA 12 SS RAD
MUA 34 SS	Rp 3/4"	20	75	128	70	MUA 34 SS RAD
MUA 10 SS	Rp 1"	25	90	151	70	MUA 10 SS RAD
MUA 114 SS	G 1 1/4"	32	110	168	70	MUA 114 SS RAD
MUA 112 SS	G 1 1/2"	40	120	193	80	MUA 112 SS RAD
MUA 20 SS	G 2"	50	150	236	80	MUA 20 SS RAD
MUA 212 SS	G 2 1/2"	65	180	201	100	MUA 212 SS RAD
MUA 30 SS	G 3"	80	210	222	100	MUA 30 SS RAD

* test pressure 16 bar

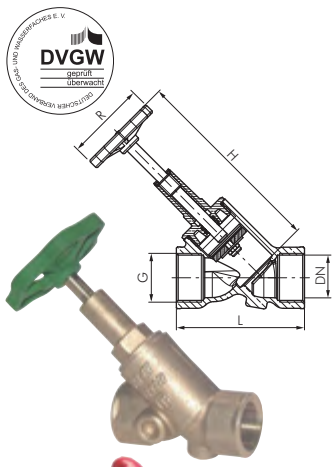

Stainless steel swing sleeve shut-off valves — PN 40

Materials: Housing: AISI 316, seal, spindle and sealing seat: PTFE, hand wheel: carbon steel
Temperature range: -20°C to max. +200°C
Operating range: Water, oil, compressed air
☞ **Optional:** Certificate 3.1

Type (INOX)	G	DN	L	H	Repl. handwheel
MUA 12 SS ES	G 1/2"	15	61	100	MUA 12 SS ES RAD
MUA 34 SS ES	G 3/4"	20	70	125	MUA 34 SS ES RAD
MUA 10 SS ES	G 1"	25	86	130	MUA 10 SS ES RAD
MUA 114 SS ES*	G 1 1/4"	32	100	165	MUA 114 SS ES RAD
MUA 112 SS ES*	G 1 1/2"	38	111	195	MUA 112 SS ES RAD
MUA 20 SS ES*	G 2"	50	138	210	MUA 20 SS ES RAD

* only for non-hazardous liquids of fluid group II

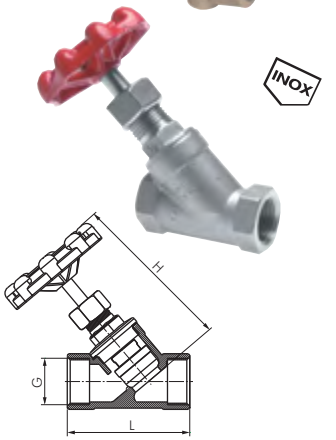

Gate valves/drain valves

Sleeve gate valves — up to 20 bar

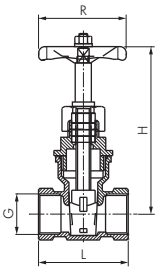

Materials: Housing: Brass, spindle seal: EPDM, slider seal: Metallic, hand wheel: Steel
Temperature range: 1°C to max. +80°C
Operating range: Water, neutral, liquid media, no media containing mineral oils

Type	G	DN	L	H	R	PN
MUAS 38	G 3/8"	13	33	67	45	20 bar
MUAS 12	G 1/2"	15	43	68	45	20 bar
MUAS 34	G 3/4"	19	47	78	45	20 bar
MUAS 10	G 1"	24	51	93	55	20 bar
MUAS 114	G 1 1/4"	32	57	108	60	20 bar
MUAS 112	G 1 1/2"	37	60	125	70	20 bar
MUAS 20	G 2"	48	67	143	80	20 bar
MUAS 212	G 2 1/2"	58	74	175	100	20 bar
MUAS 30	G 3"	72	85	205	100	20 bar
MUAS 40	G 4"	91	98	235	120	20 bar
MUAS 50	G 5"	117	105	300	140	10 bar
MUAS 60	G 6"	143	113	360	170	10 bar

Stainless steel sleeve gate valves — PN 16

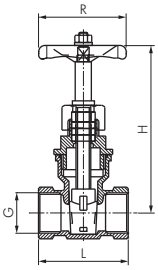

Materials: Housing: AISI 316, spindle seal: PTFE, slider seal: Metallic, hand wheel: Aluminium
Temperature range: -20°C to max. +200°C
Operating range: Liquids, gases, air, heating and hydraulic oils, fuels and water, chemicals
☞ **Optional:** Certificate 3.1

Type (INOX)	G	DN	L	H	R	Repl. handwheel
MUAS 12 ES	G 1/2"	15	55	101	70	MUAS 12 ES RAD
MUAS 34 ES	G 3/4"	20	60	108	70	MUAS 34 ES RAD
MUAS 10 ES	G 1"	25	65	118	80	MUAS 10 ES RAD
MUAS 114 ES	G 1 1/4"	32	75	132	80	MUAS 114 ES RAD
MUAS 112 ES	G 1 1/2"	38	85	149	90	MUAS 112 ES RAD
MUAS 20 ES	G 2"	50	95	175	100	MUAS 20 ES RAD
MUAS 212 ES	G 2 1/2"	65	116	213	140	MUAS 212 ES RAD
MUAS 30 ES*	G 3"	80	130	241	140	MUAS 30 ES RAD

* for liquids only

Quick shut-off valves according to DIN 4817-1 — PN 16

Materials: Housing: Brass, handle: Plastic
Temperature range: -25°C to max. +70°C
Operating range: Liquid gases according to DIN 51622 in gaseous or liquid state, mineral oils, compressed air

Type brass	Type brass chrome-plated	DN	Connection
Tube connection with brass cutting ring			
SAR 6	SAR 6 MSV	4	6 L
SAR 8	SAR 8 MSV	6	8 L
SAR 10	SAR 10 MSV	8	10 L
SAR 12	SAR 12 MSV	10	12 L
SAR 15	SAR 15 MSV	12	15 L
Thread female			
SAi 14	SAi 14 MSV	8	Rp 1/4"
SAi 38	SAi 38 MSV	10	Rp 3/8"
SAi 12	SAi 12 MSV	12	Rp 1/2"

Drain valves and venting valves with nozzles — PN 25

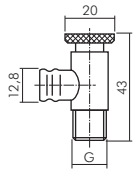

Materials: Body: Brass, seal: NBR
Temperature range: 0°C to max. +90°C

Type	G	DN
AB 18	G 1/8"	5
AB 14	G 1/4"	5

Drain valves and venting valves without nozzles — PN 10

Materials: Body: Brass chrome-plated, thread: With PTFE coating, hand wheel: Plastic
Temperature range: 0°C to max. +90°C

Type	Design	G
AB 18 B	With rotatable drainage nozzle	G 1/8"
AB 14 B	With fixed drainage nozzle	G 1/4"
AB 38 B	With fixed drainage nozzle	G 3/8"

Drain valves with rings for compressed air reservoirs on vehicles — PN 20

Activation by gently pushing it to the side

Materials: Body and valve: Brass, ring: Brass nickel-plated, cone pressure spring: Stainless steel, seal: NBR
Temperature range: -40°C to +80°C

Type	Thread	SW
EWV 12 MS	G 1/2"	27
EWV 2215 MS	M 22 x 1.5	27

3-way ball valves — up to 55 bar

Materials: Housing: Brass nickel-plated, ball: Brass hard chrome-plated, seal: PTFE/NBR
Temperature range: -10°C to max. +120°C
Switching position: Can be changed by moving the handle according to the table on page 299. The standard position for T boreholes is position T1.
Properties: Pressure inlet is possible from all the three sides.
Operating range: Water, compressed air, vacuum (max. -0.9 bar), oils, fuels (no diesel), heating oil, solvents, weak acids and alkalis.

Type L borehole	Type T borehole	G	DN	L	H	R	C	PN	Type replace. handles
KH 3/14 L MS	KH 3/14 T MS	G 1/4"	10	77	65	125	60	55 bar	G KH3/14-12
KH 3/38 L MS	KH 3/38 T MS	G 3/8"	12	77	65	125	60	55 bar	G KH3/14-12
KH 3/12 L MS	KH 3/12 T MS	G 1/2"	14	77	65	125	60	50 bar	G KH3/14-12
KH 3/34 L MS	KH 3/34 T MS	G 3/4"	18	92	83	145	71	50 bar	G KH3/34
KH 3/10 L MS	KH 3/10 T MS	G 1"	23	104	96	170	82	45 bar	G KH3/10-112
KH 3/114 L MS	KH 3/114 T MS	G 1 1/4"	29	118	102	170	93	35 bar	G KH3/10-112
KH 3/112 L MS	KH 3/112 T MS	G 1 1/2"	36	138	109	170	109	35 bar	G KH3/10-112
KH 3/20 L MS	KH 3/20 T MS	G 2"	45	162	139	260	129	35 bar	G KH3/20
KH 3/212 L MS*	KH 3/212 T MS*	Rp 2 1/2"	50	194	124	240	158	20 bar	G KH3/212

* max. 80°C, no vacuum

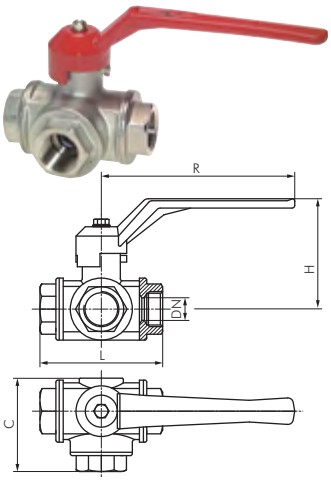

3-way T ball valves with one-sided toggle grip, compact — PN 20

Materials: Housing: Brass chrome-plated, ball: Brass chrome-plated, seal: PTFE/NBR
Temperature range: -20°C to max. +80°C
Operating range: Water (no steam), neutral, gaseous and non-aggressive, liquid media, mineral oils, compressed air, vacuum (max. -0.99 bar)
Switch panel mounting: Hole diameter: 14.5 mm, sheet metal thickness: Max. 4.5 mm

Type L borehole	Type T borehole	G	DN	L	H1	H2	R
KHTC 3/18 L	KHTC 3/18 T	G 1/8"	5.0	35	33.5	15.5	19
KHTC 3/14 L	KHTC 3/14 T	G 1/4"	5.0	37	33.5	17.5	19
KHTC 3/38 L	KHTC 3/38 T	G 3/8"	7.0	42	35.0	19.5	19

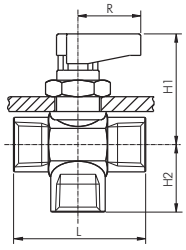

L borehole:

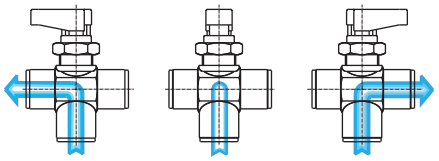

T borehole:

Stainless steel 3-way ball valves — Eco-Line/PN 63

Materials: Housing: AISI 316, ball: AISI 316, seal: PTFE (15% GF), handle: AISI 304
Temperature range: -20°C to max. +200°C
Assembly flange according to ISO 5211, lockable hand lever, please order padlocks separately (see page 640).
Handle can be swivelled by 360°, many possible switching positions.
Switching position: Can be changed by moving the handle according to the table on page 299.
The standard position for T boreholes is T1.
Properties: Pressure inlet is possible from all the three sides.
Operating range: Water, steam, oil, compressed air, fuels, solvents, aggressive media
☞ **Optional:** Certificate 3.1

Type L borehole (INOX)	Type T borehole (INOX)	G	DN	L	H	R	C	ISO 5211
KH 3/14 L ES E	KH 3/14 T ES E	G 1/4"	11.6	76.0	67	150	37.3	F 04
KH 3/38 L ES E	KH 3/38 T ES E	G 3/8"	12.5	76.0	67	150	37.3	F 04
KH 3/12 L ES E	KH 3/12 T ES E	G 1/2"	12.5	76.0	67	150	37.3	F 04
KH 3/34 L ES E	KH 3/34 T ES E	G 3/4"	16.0	86.0	77	150	44.0	F 04
KH 3/10 L ES E	KH 3/10 T ES E	G 1"	20.0	99.1	83	180	49.0	F 05
KH 3/114 L ES E	KH 3/114 T ES E	G 1 1/4"	25.0	117.4	88	180	57.0	F 05
KH 3/112 L ES E	KH 3/112 T ES E	G 1 1/2"	32.0	123.8	116	243	61.3	F 07
KH 3/20 L ES E	KH 3/20 T ES E	G 2"	38.0	148.0	124	243	74.3	F 07

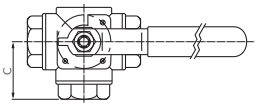

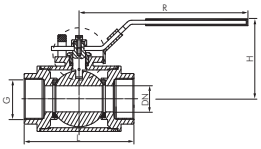

The pressure-temperature diagram is found in our Online Shop.

3-way ball valves

High pressure 3-way ball valves — up to 500 bar

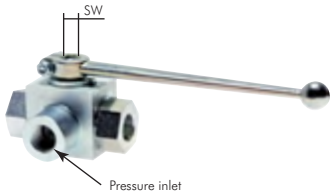

Materials: Housing: Zinc-plated steel, ball: Steel hard chrome-plated, seal: POM/NBR, handle: Zinc die-casting (from DN 20: straight - aluminium, angled - zinc-plated steel)
Temperature range: -10°C to max. +80°C
Operating range: Hydraulic oils, heating oils (water only after release by us). Apply input pressure only on the centre borehole.
Switching position: Can be changed only to position T4 by moving the handle according to the table on page 299. The standard position for T boreholes is position T1.
☞ **Optional:** NPT thread **-NPT**, pressure inlet on all 3 sides (PN 400, ≥ G 1/2": PN 350), housing burnished **-D3**

Type L borehole	Type T borehole	G	DN	SW	PN	Repl. handles straight	Repl. handles angled
KH 3/18 L HD	KH 3/18 T HD	G 1/8"	4	9	500 bar	G KH SW 9	G KH SW 9 GK
KH 3/14 L HD	KH 3/14 T HD	G 1/4"	6	9	500 bar	G KH SW 9	G KH SW 9 GK
KH 3/38 L HD	KH 3/38 T HD	G 3/8"	10	9	500 bar	G KH SW 9	G KH SW 9 GK
KH 3/12 L HD	KH 3/12 T HD	G 1/2"	13	9	500 bar	G KH SW 9	G KH SW 9 GK
KH 3/34 L HD	KH 3/34 T HD	G 3/4"	20	14	315 bar	G KH SW 14	G KH SW 14 GK
KH 3/10 L HD	KH 3/10 T HD	G 1"	25	14	315 bar	G KH SW 14	G KH SW 14 GK
KH 3/114 L HD	KH 3/114 T HD	G 1 1/4"	25	14	350 bar	G KH SW 14	G KH SW 14 GK
KH 3/112 L HD	KH 3/112 T HD	G 1 1/2"	25	14	350 bar	G KH SW 14	G KH SW 14 GK
KH 3/20 L HD	KH 3/20 T HD	G 2"	50	17	350 bar	G KH SW 17	G KH SW 17 GK

Replacement handles

☞ **Order example:** KH 3/18 L HD **
Standard type

Designation for the options:
NPT thread . . . . . **-NPT**
Pressure inlet on all 3 sides . . . . **-D3**

Stainless steel high pressure 3-way ball valves — up to 400 bar

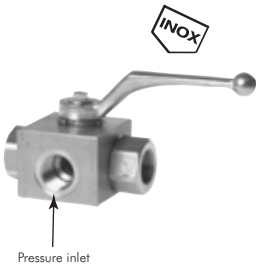

Materials: Housing: AISI 316Ti, ball: AISI 316Ti, seal: POM/NBR, handle: Zinc die-casting
Temperature range: -20°C to max. +100°C
Operating range: Hydraulic oils, heating oil (water only after release by us). Apply input pressure only on the centre borehole.
Switching position: Can be changed to position T4 by moving the handle according to the table on this page. The standard position for T boreholes is position T1.
☞ **Optional:** NPT thread **-NPT**, PTFE/FKM seal **-V**, pressure inlet on all 3 sides (only switching position L, T1 and T4 possible) **-D3**

Type L borehole (INOX)	Type T borehole (INOX)	G	DN	PN
KH 3/18 L HD ES	KH 3/18 T HD ES	G 1/8"	5	400 bar
KH 3/14 L HD ES	KH 3/14 T HD ES	G 1/4"	6	400 bar
KH 3/38 L HD ES	KH 3/38 T HD ES	G 3/8"	7	400 bar
KH 3/12 L HD ES	KH 3/12 T HD ES	G 1/2"	11.5	400 bar
KH 3/34 L HD ES	KH 3/34 T HD ES	G 3/4"	18	320 bar
KH 3/10 L HD ES	KH 3/10 T HD ES	G 1"	22	350 bar
KH 3/114 L HD ES	KH 3/114 T HD ES	G 1 1/4"	22	350 bar
KH 3/112 L HD ES	KH 3/112 T HD ES	G 1 1/2"	22	250 bar
KH 3/20 L HD ES	KH 3/20 T HD ES	G 2"	44	250 bar

☞ **Order example:** KH 3/18 L HD ES **
Standard type

Designation for the options:
NPT thread . . . . . **-NPT**
PTFE/FKM seal . . . . . **-V**
Pressure inlet on all 3 sides . . . . **-D3**

High pressure 3-way ball valves, w/ cutting ring connections ISO 8434-1 — up to 500 bar

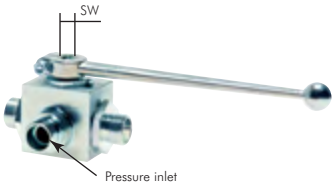

Materials: Housing: Zinc-plated steel, ball: Steel hard chrome-plated, seal: POM/NBR, handle: Zinc die-casting (from DN 16: straight - aluminium, angled - zinc-plated steel)
Temperature range: -10°C to max. +80°C
Operating range: Hydraulic oils, heating oil (water only after release by us). Apply input pressure only on the centre borehole.
Switching position: Can be changed to position T4 by moving the handle according to the table on this page. The standard position for T boreholes is position T1.

Type L borehole	Type T borehole	Tube Ø ext.	DN	Thread	SW	PN	Repl. handles straight	Replacement handles angled
Light model series								
KH 3/6 L L HD	KH 3/6 L T HD	6 L	4	M 12 x 1.5	9	315 bar	G KH SW 9	G KH SW 9 GK
KH 3/8 L L HD	KH 3/8 L T HD	8 L	6	M 14 x 1.5	9	315 bar	G KH SW 9	G KH SW 9 GK
KH 3/10 L L HD	KH 3/10 L T HD	10 L	8	M 16 x 1.5	9	315 bar	G KH SW 9	G KH SW 9 GK
KH 3/12 L L HD	KH 3/12 L T HD	12 L	10	M 18 x 1.5	9	315 bar	G KH SW 9	G KH SW 9 GK
KH 3/15 L L HD	KH 3/15 L T HD	15 L	12	M 22 x 1.5	9	315 bar	G KH SW 9	G KH SW 9 GK
KH 3/18 L L HD	KH 3/18 L T HD	18 L	16	M 26 x 1.5	12	315 bar	G KH SW 12	G KH SW 12 GK
KH 3/22 L L HD	KH 3/22 L T HD	22 L	20	M 30 x 2	14	160 bar	G KH SW 14	G KH SW 14 GK
KH 3/28 L L HD	KH 3/28 L T HD	28 L	25	M 36 x 2	14	160 bar	G KH SW 14	G KH SW 14 GK
Heavy model series								
KH 3/8 S L HD	KH 3/8 S T HD	8 S	4	M 16 x 1.5	9	500 bar	G KH SW 9	G KH SW 9 GK
KH 3/10 S L HD	KH 3/10 S T HD	10 S	6	M 18 x 1.5	9	500 bar	G KH SW 9	G KH SW 9 GK
KH 3/12 S L HD	KH 3/12 S T HD	12 S	8	M 20 x 1.5	9	400 bar	G KH SW 9	G KH SW 9 GK
KH 3/14 S L HD	KH 3/14 S T HD	14 S	10	M 22 x 1.5	9	400 bar	G KH SW 9	G KH SW 9 GK
KH 3/16 S L HD	KH 3/16 S T HD	16 S	12	M 24 x 1.5	9	315 bar	G KH SW 9	G KH SW 9 GK
KH 3/20 S L HD	KH 3/20 S T HD	20 S	16	M 30 x 2	12	315 bar	G KH SW 12	G KH SW 12 GK
KH 3/25 S L HD	KH 3/25 S T HD	25 S	20	M 36 x 2	14	315 bar	G KH SW 14	G KH SW 14 GK
KH 3/30 S L HD	KH 3/30 S T HD	30 S	25	M 42 x 2	14	315 bar	G KH SW 14	G KH SW 14 GK

Replacement handles

3-way flanged ball valves, reduced bore — PN 16

Materials: Housing: Steel, ball: AISI 304, seal: PTFE/FKM
Temperature range: -10°C to max. + 160°C
Pressure range: 0-16 bar, vacuum 99.9 %
Assembly flange according to ISO 5211 (not DN 15 and DN 20)
Properties: Pressure inlet only possible from the front (centre borehole).
Operating range: Water, oil, compressed air, fuel, vacuum
☞ **Optional:** Pneumatic actuator** **-P**

Type ⊕ **L borehole**	Type ⊕ **T borehole**	DN	LW	L1	L2	B	d	H	G1	G2	ISO 5211*
KHFL 3/15 L	KHFL 3/15 T	15	10	40	76	65	95	64.5	4 x M12	4 x Ø14	---
KHFL 3/20 L	KHFL 3/20 T	20	15	40	82	75	105	67.0	4 x M12	4 x Ø14	---
KHFL 3/25 L	KHFL 3/25 T	25	20	46	86	85	115	79.0	4 x M12	4 x Ø14	F 04
KHFL 3/32 L	KHFL 3/32 T	32	25	58	105	100	140	84.0	4 x M16	4 x Ø18	F 04
KHFL 3/40 L	KHFL 3/40 T	40	32	71	110	110	150	102.5	4 x M16	4 x Ø18	F 05
KHFL 3/50 L	KHFL 3/50 T	50	40	82	120	125	165	109.0	4 x M16	4 x Ø18	F 05
KHFL 3/65 L	KHFL 3/65 T	65	50	106	125	145	185	128.0	4 x M16	4 x Ø18	F 07
KHFL 3/80 L	KHFL 3/80 T	80	64	122	150	160	200	136.5	8 x M16	8 x Ø18	F 07
KHFL 3/100 L	KHFL 3/100 T	100	76	152	159	180	220	155.5	8 x M16	8 x Ø18	F 10
KHFL 3/125 L	KHFL 3/125 T	125	100	196	190	210	250	178.5	8 x M16	8 x Ø18	F 10
KHFL 3/150 L	KHFL 3/150 T	150	125	242	210	240	285	252.0	8 x M20	8 x Ø22	F 12

* drive shaft delivered as 2-flat, ** please specify the exact operating case

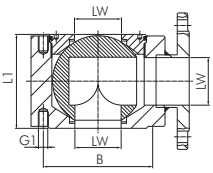

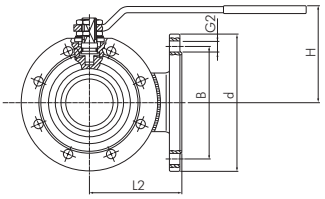

Stainless steel 3-way flanged ball valves, full bore — PN 16

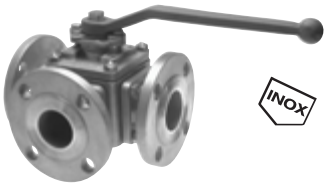

Materials: Housing: AISI 316, ball: AISI 316, seal: PTFE
Temperature range: -20°C to max. + 200°C
Assembly flange conforming to ISO 5211
Properties: Pressure inlet is possible from all the three sides.
Operating range: Water, oil, compressed air, fuels, solvents, aggressive media, food, beverages
☞ **Optional:** Pneumatic actuator*** **-P**, certificate 3.1

Type ⊕ INOX **L borehole**	Type ⊕ INOX **T borehole**	DN	L1	L2	B	d	R	t	ISO 5211
KHFL 3/25 L ES	KHFL 3/25 T* ES	25	225	112.5	85	115	172	18	F 05
KHFL 3/40 L ES	KHFL 3/40 T* ES	40	242	121.0	110	150	258	18	F 05
KHFL 3/50 L ES	KHFL 3/50 T* ES	50	250	125.0	125	165	258	18	F 07
KHFL 3/65 L ES	KHFL 3/65 T* ES	65	285	142.5	145	185	374	18	F 10
KHFL 3/80 L ES**	KHFL 3/80 T* ES**	80	297	148.5	160	200	374	20	F 10
KHFL 3/100 L ES**	KHFL 3/100 T* ES**	100	339	169.5	180	220	374	20	F 10

* please indicate the switching position. See table below (standard position T1), ** actuating lever in tube design

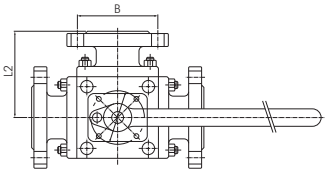

☞ **Order example:** KHFL 3/25 L ES **

Standard type

Designation for the options:
Pneumatic actuator*** . . . . . **-P**

*** please specify the exact operating case.

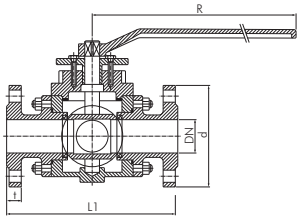

Position		*L borehole*	*T borehole*			
	90°			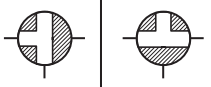		
	0°			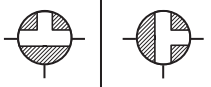		
Switching position		L	T1	T2	T3	T4

For more flange dimensions see page 262. The pressure-temperature diagram is found in the Online Shop.

Flanged ball valves

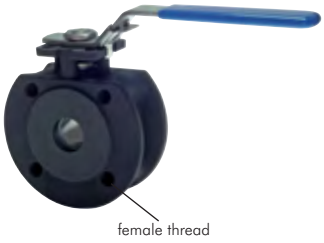

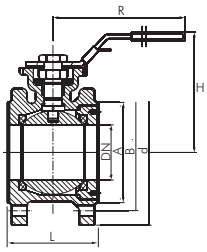

Compact flanged ball valves, full bore — PN 16/40

Materials: Housing: Steel, ball: AISI 316, seal: PTFE/FKM,
Temperature range: -20°C to max. +180°C
Direct assembly flange according to ISO 5211; lockable hand lever, please order the padlocks separately (see page 641).
Operating range: Water, oil, compressed air, vacuum (max. -0.9 bar), fuels
☞ **Optional:** Pneumatic actuator (see page 306), electric actuator* **-EL**

Type	DN	L +2	A	B	d	H	R	FT	PN	ISO 5211
KHFLK 15/40	15	39	45	65	95	98	120	M 12	16/40	F 03/F 04-VK9
KHFLK 20/40	20	44	56	75	105	98	120	M 12	16/40	F 03/F 04-VK9
KHFLK 25/40	25	49	65	85	115	110	140	M 12	16/40	F 04/F 05-VK11
KHFLK 32/40	32	56	75	100	135	120	170	M 16	16/40	F 04/F 05-VK11
KHFLK 40/40	40	65	85	110	145	140	200	M 16	16/40	F 05/F 07-VK14
KHFLK 50/40	50	73	100	125	160	147	240	M 16	16/40	F 05/F 07-VK14
KHFLK 65/16	65	94	120	145	180	172	280	M 16	16	F 07/F 10-VK17
KHFLK 80/16	80	116	135	160	195	188	320	M 16	16	F 07/F 10-VK17
KHFLK 100/16	100	140	155	180	215	202	400	M 16	16	F 10
KHFLK 125/16	125	196	190	210	250	178	381	M 16	16	F 10

☞ **Order example:** KHFLK 15/40 **
Standard type

Designation for the options:
Pneumatic actuator . . . . . **-see page 306**
Electric actuator* . . . . . **-EL**

* please specify the exact operating case.

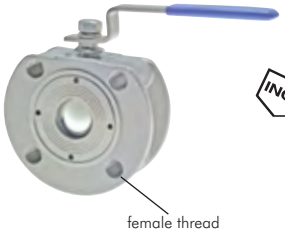

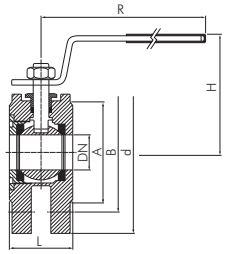

For more flange dimensions see page 262. The pressure-temperature diagram is found in the Online Shop.

Stainless steel compact flanged ball valves, full bore — PN 16/40

Materials: Housing: AISI 316, ball: AISI 316, seal: PTFE, handle: AISI 304
Temperature range: -20°C to max. +200°C
Assembly flange conforming to ISO 5211
Operating range: Water, oil, compressed air, fuels, solvents, aggressive media
☞ **Optional:** Pneumatic actuator (see page 306), electric actuator* **-EL**, certificate 3.1

Type PN 16	Type PN 40	DN	L	A	B	d	H	R	FT	ISO 5211
KHFLK 15/16 ES E	KHFLK 15/40 ES E	15	36	45	65	88	68	150	M 12	F 03
KHFLK 20/16 ES E	KHFLK 20/40 ES E	20	38	58	75	98	72	150	M 12	F 03
KHFLK 25/16 ES E	KHFLK 25/40 ES E	25	43	68	85	108	75	150	M 12	F 03
KHFLK 32/16 ES E	KHFLK 32/40 ES E	32	51	78	100	128	89	156	M 16	F 03
KHFLK 40/16 ES E	KHFLK 40/40 ES E	40	63	88	110	150	102	180	M 16	F 05
KHFLK 50/16 ES E	KHFLK 50/40 ES E	50	70	100	125	165	108	180	M 16	F 05
KHFLK 65/16 ES E	---	65	107	125	145	185	143	282	M 16	F 07
---	KHFLK 65/40 ES E	65	104	122	145	185	148	262	M 16	F 07
KHFLK 80/16 ES E	---	80	120	138	160	200	152	290	M 16	F 07
---	KHFLK 80/40 ES E	80	118	138	160	200	150	262	M 16	F 07
KHFLK 100/16 ES E	---	100	152	158	180	220	168	325	M 16	F 10
---	KHFLK 100/40 ES E	100	149	162	190	235	182	500**	M 20	F 07

** tube lever

☞ **Order example:** KHFLK 15/16 ES **
Standard type

Designation for the options:
Pneumatic actuator . . . . . **-see page 306**
Electric actuator* . . . . . **-EL**

* please specify the exact operating case.

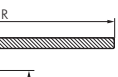

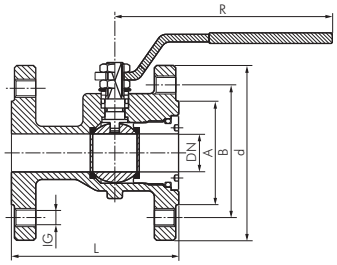

For more flange dimensions see page 262.

Flanged ball valves, 1-piece, full bore — PN 16

Materials: Housing: GG25, ball: Stainless steel AISI 304, seal: PTFE/NBR
Temperature range: -10°C to max. +120°C
Length according to DIN 3202-F4 (DIN EN 558-1, row 14) (from DN 200 according to DIN 3202-F5, DIN EN 558-1, row 15), from DN 80: Assembly flange according to ISO 5211
Pressure range: 0-16 bar, vacuum 99.9 %
Operating range: Water, oil, compressed air, fuels, vacuum
☞ **Optional:** Pneumatic actuator (see page 307), electric actuator* **-EL**

Type	DN	L	A	B	d	R	FT	ISO 5211
KHFL 25/16 KES	25	125	68	85	115	174	M 12	---
KHFL 32/16 KES	32	130	78	100	140	174	M 16	---
KHFL 40/16 KES	40	140	88	110	150	250	M 16	---
KHFL 50/16 KES	50	150	102	125	165	250	M 16	---
KHFL 65/16 KES	65	170	122	145	185	321	M 16	---
KHFL 80/16 KES	80	180	138	160	200	321	M 16	F 07
KHFL 100/16 KES	100	190	158	180	220	381	M 16	F 10
KHFL 125/16 KES**	125	200	188	210	250	381	M 16	F 10
KHFL 150/16 KES**	150	210	212	240	285	700	M 20	F 12
KHFL 200/16 KES**	200	400	268	295	340***	700	M 22	F 12

** 2-piece, *** max. outside diameter of the body 400 mm

☞ **Order example:** KHFL 25/16 **
Standard type

Designation for the options:
Pneumatic actuator . . . . . **-see page 307**
Electric actuator* . . . . . **-EL**

* please specify the exact operating case.

Flanged ball valves, 2-piece, full bore, DVGW tested* — PN 40

Materials: Housing: Cast steel, ball: Stainless steel AISI 304, seal: PTFE/FKM
Temperature range: -20°C to max. +180°C, gas: -20°C to max. +60°C (dependent on operating pressure)
Length according to DIN 3202-F4 (DIN EN 558-1, row 14), assembly flange conforming to ISO 5211
Operating range: Water, oil, compressed air, fuels, gas
☞ **Optional:** Pneumatic actuator* **-P**, electric actuator* **-EL**

Type	DN	L	A	B	d	R	ISO 5211
KHFL 15/40	15	115	45	65	95	130	F 03
KHFL 20/40	20	120	58	75	105	130	F 03
KHFL 25/40	25	125	68	85	115	170	F 05
KHFL 32/40	32	130	78	100	140	170	F 05
KHFL 40/40	40	140	88	110	150	220	F 05
KHFL 50/40	50	150	102	125	165	220	F 05
KHFL 65/40	65	170	122	145	185	250	F 07
KHFL 80/40	80	180	138	160	200	350	F 10
KHFL 100/40	100	190	162	190	235	350	F 10

* please specify the exact operating case.

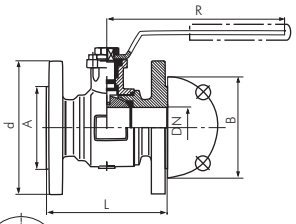

For more flange dimensions see page 262.

Stainless steel flanged ball valves, 2-piece, full bore — PN 16

Materials: Housing: AISI 316, ball: AISI 316, seal: PTFE (15% GF)/FKM, handle: AISI 304
Temperature range: -20°C to max. +200°C
Length according to DIN 3202-F4 (DIN EN 558-1, row 14) (from DN 150 according to DIN 3202-F5, DIN EN 558-1, row 15), assembly flange conforming to ISO 5211, lockable hand lever, please order padlocks separately (see page 641).
Operating range: Water, steam, oil, compressed air, fuels, solvents, aggressive media
☞ **Optional:** Pneumatic actuator (see page 307), electric actuator* **-EL**, certificate 3.1

Type (INOX)	DN	L	A	B	d	R	ISO 5211
KHFL 15/16 ES	15	115	45	65	95	169	F 04
KHFL 20/16 ES	20	120	58	75	105	169	F 04
KHFL 25/16 ES	25	125	68	85	115	205	F 05
KHFL 32/16 ES	32	130	78	100	140	205	F 05
KHFL 40/16 ES	40	140	88	110	150	267	F 07
KHFL 50/16 ES	50	150	102	125	165	267	F 07
KHFL 65/16 ES	65	170	122	145	185	298	F 07
KHFL 80/16 ES	80	180	138	160	200	390	F 07
KHFL 100/16 ES	100	190	158	180	220	390	F 07
KHFL 150/16 ES	150	350	212	240	285	743	F 12
KHFL 200/16 ES	200	400	268	295	340	925	F 12

☞ **Order example:** KHFL 15/16 ES **

Standard type

Designation for the options:
Pneumatic actuator . . . . . **-see page 307**
Electric actuator* . . . . . **-EL**

* please specify the exact operating case.

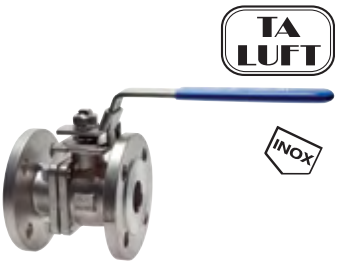

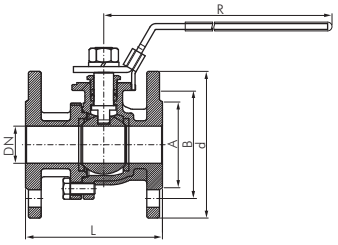

For more flange dimensions see page 262. Refer to the pressure-temperature diagram in our Online Shop.

Stainless steel flanged ball valves, 2-piece, full bore — PN 40

Materials: Housing: AISI 316, ball: AISI 316, seal: PTFE (15% GF)/FKM, handle: AISI 304
Temperature range: -20°C to max. +200°C
Length according to DIN 3202-F4 (DIN EN 558-1, row 14) (from DN 150 according to DIN 3202-F5, DIN EN 558-1, row 15), assembly flange conforming to ISO 5211, lockable hand lever, please order padlocks separately (see page 641).
Operating range: Water, steam, oil, compressed air, fuels, solvents, aggressive media
☞ **Optional:** Pneumatic actuator (see page 307), electric actuator* **-EL**, certificate 3.1

Type (INOX)	DN	L	A	B	d	R	ISO 5211
KHFL 15/40 ES	15	115	45	65	95	169	F 04
KHFL 20/40 ES	20	120	58	75	105	169	F 04
KHFL 25/40 ES	25	125	68	85	115	205	F 05
KHFL 32/40 ES	32	130	78	100	140	205	F 05
KHFL 40/40 ES	40	140	88	110	150	267	F 07
KHFL 50/40 ES	50	150	102	125	165	267	F 07
KHFL 65/40 ES	65	170	122	145	185	298	F 07
KHFL 80/40 ES	80	180	138	160	200	390	F 07
KHFL 100/40 ES	100	190	162	190	235	390	F 07
KHFL 150/40 ES	150	350	218	250	300	743	F 12
KHFL 200/40 ES	200	400	285	320	375	925	F 12

☞ **Order example:** KHFL 25/40 ES **

Standard type

Designation for the options:
Pneumatic actuator . . . . . **-see page 307**
Electric actuator* . . . . . **-EL**

* please specify the exact operating case.

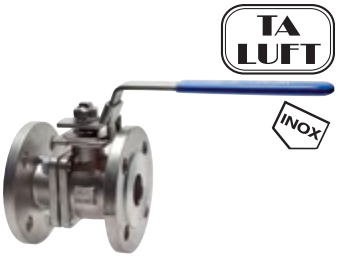

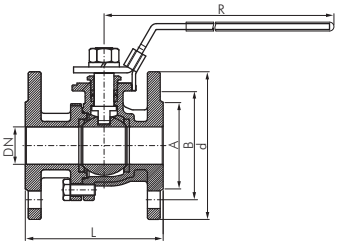

For more flange dimensions see page 262. Refer to the pressure-temperature diagram in our Online Shop.

Pinch valves/shut-off valves

Pinch valves

Field of application: Pneumatic pinch valves are the fitting solution for the shut-off, regulation and dosing of abrasive, corrosive and fibrous products. They are ideally suited for use with these products due to their completely free product flow, whereby a practical blocking and dead space-free fitting results. The pneumatic pinch valves ensure an optimal shut-off, also when used with solids, such as granules, powders, pellets, chipping, sand, cement, gravel, textile fibres, carbon, fine glass fragments and liquids that contain solids.

stainless steel

aluminium

POM

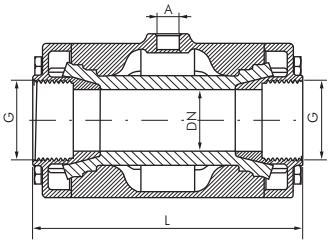

Advantages:
- Completely free flow
- No clogging by media
- Minimum frictional resistance
- Quick opening and closing
- Low energy consumption

Pneumatic pinch valves with female threads - normal open — PN 6

Materials: Housing: Type stainless steel: AISI 316, type aluminium: Aluminium powder coated, type POM: POM, sleeve: AISI 316 (type POM: POM), sleeve: Light natural rubber in food safe quality
Operating pressure: Max. 6 bar
Control pressure: Max. 2 bar higher than the medium's pressure
Temperature range: -10°C to max. +80°C
☞ **Optional:** Natural rubber sleeve, abrasion resistant (-10°C to max. +80°C) **-AB**, EPDM sleeve (-10°C to max. +120°C) **-EP**

Type stainless steel (INOX)	Type aluminium	Type POM	G	DN	A	L	Type replacement sleeve
QVMC 38 ES	QVMC 38**	QVMP 38	G 3/8"	10	G 1/8"	80	QVM 38 *** REP
QVMC 12 ES	QVMC 12**	QVMP 12	G 1/2"	15	G 1/8"	95	QVM 12 *** REP
QVMC 34 ES	QVMC 34	QVMP 34	G 3/4"	20	G 1/8"	103	QVM 34 *** REP
QVMC 10 ES	QVMC 10	QVMP 10	G 1"	25	G 1/8"	120	QVM 10 *** REP
QVMC 114 ES	QVMC 114	QVMP 114	G 1 1/4"	32	G 1/4"	140 (135)*	QVM 114 *** REP
QVMC 112 ES	QVMC 112	QVMP 112	G 1 1/2"	40	G 1/4"	160	QVM 112 *** REP
QVMC 20 ES	QVMC 20	QVMP 20	G 2"	50	G 1/4"	185 (170)*	QVM 20 *** REP
QVMC 212 ES	QVMC 212	---	G 2 1/2"	65	G 1/4"	200	QVM 212 *** REP
QVMC 30 ES	QVMC 30	---	G 3"	80	G 1/4"	230	QVM 30 *** REP
QVMC 40 ES	QVMC 40	---	G 4"	100	G 1/4"	280	QVM 40 *** REP

* for type POM, ** POM housing, *** please enter the required material: LE = natural rubber, food quality, AB = natural rubber, abrasion resistant, EP = EPDM

☞ **Order example:** QVMC 38 ES **
- QVMC 38 ES: Standard type
- **: Designation for the options:
  - Sleeve made of natural rubber (abrasion resistant) . . **-AB**
  - Sleeve made of EPDM . . . . . **-EP**

Problem solver & cost saver

- Flow like a pneumatically controlled ball valve
- Short switching times
- Compact design
- Installation position as required
- Very economical price

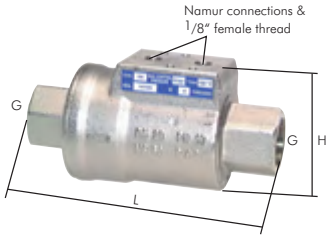

Blocking valves, pneumatically actuated — PN 10

Materials: Housing and piston: Brass nickel-plated, seals: NBR
Temperature range: -20°C to max. +80°C, with FKM seal to max. +150°C
Operating pressure: Max. 10 bar as well as low vacuum
Control pressure: 3 - 8 bar (4.2 - 8 bar for single acting design), connection: Namur & 2x G 1/8" FT
Operating ranges: Water, oil, compressed air
☞ **Optional:** FKM seals (-20°C to max. +150°C) **-V**, magn. limit switch **-EB**

Type double acting	Type spring closing	Type spring opening	G	L	H	DN	Sealing set
VIP 38 MS	VIP 38 FS MS	VIP 38 FO MS	G 3/8"	98	54	10	VIP 38 REP **
VIP 12 MS	VIP 12 FS MS	VIP 12 FO MS	G 1/2"	112	60	15	VIP 12 REP **
VIP 34 MS	VIP 34 FS MS	VIP 34 FO MS	G 3/4"	135	70	20	VIP 34 REP **
VIP 10 MS	VIP 10 FS MS	VIP 10 FO MS	G 1"	143	76	25	VIP 10 REP **
VIP 114 MS	VIP 114 FS MS	VIP 114 FO MS	G 1 1/4"	165	92	32	VIP 114 REP **
VIP 112 MS	VIP 112 FS MS	VIP 112 FO MS	G 1 1/2"	180	102	40	VIP 112 REP **
VIP 20 MS	VIP 20 FS MS	VIP 20 FO MS	G 2"	207	115	50	VIP 20 REP **

☞ **Order example:** VIP 38 MS **
- VIP 38 MS: Standard type
- **: Designation for the options:
  - FKM seal (-20°C to max. +150°C) . . . . . **-V**
  - Magnetic limit switch . . . . . **-EB**

☞ **Order example:** VIP 38 REP **
- VIP 38 REP: Standard type
- **: Designation for the options:
  - Seal NBR . . . . . **-NBR**
  - Seal FKM . . . . . **-FKM**

2/2-way valves with pneumatic actuation — Eco-Line

Materials: Body: AISI 316, seals: PTFE/FKM
Temperature range: -10°C to max. +60°C
Media: Compressed air, neutral gases, water, oils, weak acids and alkalis
Switching position: Zero position closed (NC)
Flow direction: Closing with media flow (not recommended for liquids with high flow velocity)

Type	Thread	DN	Working pressure	Control pressure	Length	KV value	Type repair sets
Actuator made of stainless steel AISI 316 (INOX)							
U 212 ES2A E	G 1/2"	13	0 - 16 bar	3 - 10 bar	74	78 l/min	U 212 ES2A E REP
U 234 ES2A E	G 3/4"	18	0 - 16 bar	4 - 10 bar	84	158 l/min	U 234 ES2A E REP
U 210 ES2A E	G 1"	24	0 - 16 bar	5.5 - 10 bar	100	301 l/min	U 210 ES2A E REP
U 2114 ES2A E	G 1 1/4"	31	0 - 16 bar	5 - 10 bar	112	385 l/min	U 2114 ES2A E REP
U 2112 ES2A E	G 1 1/2"	35	0 - 16 bar	6 - 10 bar	126	548 l/min	U 2112 ES2A E REP
U 220 ES2A E	G 2"	45	0 - 10 bar	6.5 - 10 bar	146	880 l/min	U 220 ES2A E REP
Actuator made of plastic							
U 212 ESK E	G 1/2"	13	0 - 16 bar	6 - 8 bar	70	78 l/min	U 212 ESK E REP
U 234 ESK E	G 3/4"	18	0 - 16 bar	6 - 8 bar	76	158 l/min	U 234 ESK E REP
U 210 ESK E	G 1"	24	0 - 13 bar	6 - 8 bar	90	301 l/min	U 210 ESK E REP
U 2114 ESK E	G 1 1/4"	30	0 - 16 bar	6 - 8 bar	116	366 l/min	U 2114 ESK E REP
U 2112 ESK E	G 1 1/2"	35	0 - 13 bar	6 - 8 bar	116	548 l/min	U 2112 ESK E REP
U 220 ESK E	G 2"	45	0 - 8 bar	6 - 8 bar	138	880 l/min	U 220 ESK E REP

2/2-way valves with pneumatic actuation

Materials: Type brass: Valve body: Red bronze (2 1/2" to 3": brass), seat sealing: PTFE, spindle seal: NBR, control cylinder: Brass/aluminium, spindle: Stainless steel, seals: NBR
Type AISI 316: Valve body: AISI 316, valve internal parts: AISI 304, seat and spindle seal: PTFE, control cylinder: Brass nickel-plated/aluminium, spindle: Stainless steel, seals: FKM
Temperature range: -20°C to max. +85°C (type AISI 316: -40°C to max. +200°C)
Control pressure: 4 to 10 bar (6 bar optimal), control connection: G 1/8"
Flow direction: Closing with media flow (not recommended for liquids with high flow velocity).
If necessary, use the **-GS** option to close against the media flow
☞ **Optional:** PTFE spindle seal (up to 200°C) **-PTFE**[2], design closes against the medium stream (for use with liquids), please ask about working pressures **-GS**, control cylinder made of stainless steel AISI 316 with FKM seals **-2A**[3]

Type brass	Operating pressure	Type AISI 316 (INOX)	Operating pressure	Thread	Type repair sets
Zero position closed					
U 212 MS	0 - 16 bar	U 212 ES	0 - 25 bar	G 1/2"	U 212 * REP
U 234 MS	0 - 16 bar	U 234 ES	0 - 20 bar	G 3/4"	U 234 * REP
U 210 MS	0 - 16 bar	U 210 ES	0 - 16 bar	G 1"	U 210 * REP
U 2114 MS[1]	0 - 16 bar	U 2114 ES	0 - 9 bar	G 1 1/4"	U 2114 * REP
U 2114-10 MS REP	0 - 10 bar	---	---	G 1 1/4"	U 2114-10 MS REP
---	---	U 2114-25 ES[1]	0 - 25 bar	G 1 1/4"	U 2114-25 ES REP
U 2112 MS[1]	0 - 16 bar	U 2112 ES	0 - 7 bar	G 1 1/2"	U 2112 * REP
U 2112-8 MS REP	0 - 8 bar	---	---	G 1 1/2"	U 2112-8 MS REP
---	---	U 2112-20 ES[1]	0 - 20 bar	G 1 1/2"	U 2112-20 ES REP
U 220 MS[1]	0 - 16 bar	---	---	G 2"	U 220 MS REP
U 220-4 MS REP	0 - 4 bar	U 220 ES	0 - 4 bar	G 2"	U 220 * REP
---	---	U 220-12 ES[1]	0 - 12 bar	G 2"	U 220-12 ES REP
---	---	U 220-20 ES[1, 3]	0 - 20 bar	G 2"	U 220-20 ES REP
U 2212-6 MS[1]	0 - 6 bar	---	---	G 2 1/2"	U 2212-6 MS REP
U 2212-10 MS[1, 3]	0 - 10 bar	---	---	G 2 1/2"	U 2212-10 MS REP
U 230-4 MS[1]	0 - 4 bar	---	---	G 3"	U 230-4 MS REP
U 230-10 MS[1, 3]	0 - 10 bar	---	---	G 3"	U 230-10 MS REP
Zero position open					
UO 212 MS	0 - 16 bar	UO 212 ES	0 - 25 bar	G 1/2"	UO 212 * REP
UO 234 MS	0 - 16 bar	UO 234 ES	0 - 20 bar	G 3/4"	UO 234 * REP
UO 210 MS	0 - 16 bar	UO 210 ES	0 - 16 bar	G 1"	UO 210 * REP
UO 2114 MS[1]	0 - 16 bar	UO 2114 ES	0 - 9 bar	G 1 1/4"	UO 2114 * REP
---	---	UO 2114-25 ES[1]	0 - 25 bar	G 1 1/4"	UO 2114-25 ES REP
UO 2112 MS[1]	0 - 16 bar	UO 2112 ES	0 - 7 bar	G 1 1/2"	UO 2112 * REP
---	---	UO 2112-20 ES[1]	0 - 20 bar	G 1 1/2"	UO 2112-20 ES REP
UO 220 MS[1]	0 - 11 bar	UO 220 ES	0 - 4 bar	G 2"	UO 220 * REP
---	---	UO 220-12 ES[1]	0 - 12 bar	G 2"	UO 220-12 ES REP
---	---	UO 220-20 ES[1, 3]	0 - 20 bar	G 2"	UO 220-20 ES REP
UO 2212-6 MS[1]	0 - 6 bar	---	---	G 2 1/2"	UO 2212-6 MS REP
UO 2212-10 MS[1, 3]	0 - 10 bar	---	---	G 2 1/2"	UO 2212-10 MS REP
UO 230-4 MS[1]	0 - 4 bar	---	---	G 3"	UO 230-4 MS REP
UO 230-10 MS[1, 3]	0 - 10 bar	---	---	G 3"	UO 230-10 MS REP

1) aluminium actuator, 2) only for valves made of red bronze or brass, 3) control connection: G 1/4"
* please enter the corresponding type of material: MS for brass, ES for stainless steel

☞ **Order example:** U 212 **
Standard type

Designation for the options:
Spindle seal made of PTFE (up to 200°C) . . . . . **-PTFE**[2]
Design closes against the medium stream (for use with liquids), please ask about working pressures . . . . . **-GS**
Control cylinder made of stainless steel AISI 316 with FKM seals . **-2A**[3]

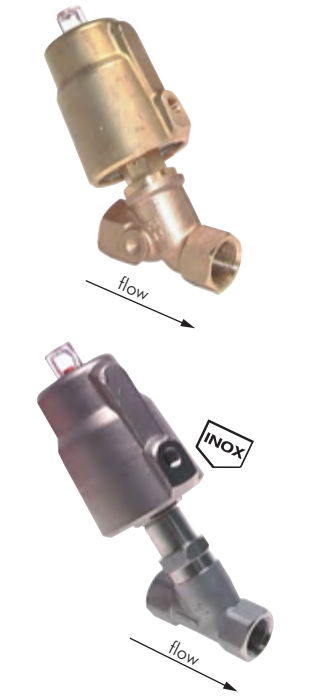

When ordering repair sets please notice the difference between stainless steel and red bronze or brass valves.
The repair sets consists of complete valve disk, spindle, spring and all O-rings, groove rings and seals necessary for the valve.

Pneumatically actuated ball valves

EN 331

for Namur connection and female thread

Warning: With high media temperatures the actuator must be protected by a thermal bridge!

Ball valves with pneumatic rotary actuators — up to 40 bar

Ball valve
Materials: Housing: Brass nickel-plated, ball: Brass hard chrome-plated, seal: PTFE/FKM
Length according to DIN 3202-M3 (G ½" - G 2"), DVGW approval for G ½" - G 2" (PN 5/MOP 5)
Temperature range: -20°C to max. +160°C (G 2½" - G 4": max. +120°C), gas: -20°C to max. +60°C
Operating range: Water, oil, compressed air, vacuum (max. -0.9 bar), fuels, heating oil, solvents, weak acids and alkalis, G ½" - G 2": Gases in accordance with DVGW worksheet (such as natural gas, city gas, liquid gas up to 5 bar)
Rotary actuator
Design: ATEX-compliant Ⓔx II 2GD c 85°C (Actuators with size 12 or greater: Ⓔx II 2GD c 110°C)
Materials: Housing: Aluminium anodised, gear rack and piston: Aluminium, cover: Acetal resin, seal: NBR
Temperature range: -20°C to max. +80°C
Control pressure: 6 - 10 bar (lower pressures upon request)
☞ **Optional:** FKM seal **-V**

Type double acting	Type spring closing	Type spring opening	Thread ball valve	DN	Install. length ball valve	PN	Actuator size* Double act.	Single act.
KH 14 P	KH 14 P FS	KH 14 P FO	Rp ¼"	10	67	40 bar	1	2-F03
KH 38 P	KH 38 P FS	KH 38 P FO	Rp ⅜"	14	67	40 bar	1	2-F03
KH 12 P	KH 12 P FS	KH 12 P FO	G ½"	15	75	40 bar	1	2-F03
KH 34 P	KH 34 P FS	KH 34 P FO	G ¾"	20	80	40 bar	1	2-F03
KH 10 P	KH 10 P FS	KH 10 P FO	G 1"	25	90	40 bar	1	2-F03
KH 114 P	KH 114 P FS	KH 114 P FO	G 1¼"	32	110	40 bar	6-VK11	6-VK11
KH 112 P	KH 112 P FS	KH 112 P FO	G 1½"	40	120	40 bar	6-VK11	6-VK11
KH 20 P	KH 20 P FS	KH 20 P FO	G 2"	50	140	40 bar	6	6
KH 212 P	KH 212 P FS	KH 212 P FO	G 2½"	65	165	30 bar	6	12-F07-VK14
KH 30 P	KH 30 P FS	KH 30 P FO	G 3"	76	188	25 bar	12-F07-VK14	12-F07-VK14
KH 40 P	KH 40 P FS	KH 40 P FO	Rp 4"	90	200	20 bar	25-F07-VK14	25-F07-VK14

* for dimensions and replacement actuators see page 310

Stainless steel ball valves, 3-piece, with pneumatic rotary actuators — PN 63

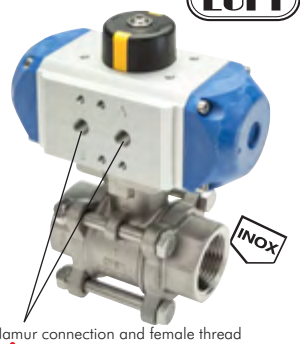

for Namur connection and female thread

Warning: With high media temperatures the actuator must be protected by a thermal bridge!

Ball valve
Materials: Housing: AISI 316, ball: AISI 316, seal: PTFE (15% GF)/FKM
Length according to DIN 3202-M3
Temperature range: -20°C to max. +180°C
Operating range: Water, oil, compressed air, vacuum (max. -0.9 bar), fuels, solvents, aggressive media
☞ **Optional:** Welding ends **-AS**, certificate 3.1
Rotary actuator
Design: ATEX-compliant Ⓔx II 2GD c 85°C (Actuators with size 12 or greater: Ⓔx II 2GD c 110°C)
Materials: Housing: Aluminium anodised, gear rack and piston: Aluminium, cover: Acetal resin, seals: NBR
Temperature range: -20°C to max. +80°C
Control pressure: 6 - 10 bar (lower pressures upon request)
☞ **Optional:** FKM seals **-V**

Type double acting	Type spring closing	Type spring opening	Thread ball valve	DN	Install. length ball valve	Actuator size* Double act.	Single act.
KH 14 P ES	KH 14 P FS ES	KH 14 P FO ES	G ¼"	10	60	1	2-F03
KH 38 P ES	KH 38 P FS ES	KH 38 P FO ES	G ⅜"	12	60	1	2-F03
KH 12 P ES	KH 12 P FS ES	KH 12 P FO ES	G ½"	15	75	1	2-F03
KH 34 P ES	KH 34 P FS ES	KH 34 P FO ES	G ¾"	20	80	1	2-F03
KH 10 P ES	KH 10 P FS ES	KH 10 P FO ES	G 1"	25	90	2	6-F04
KH 114 P ES	KH 114 P FS ES	KH 114 P FO ES	G 1¼"	32	110	6-VK11	6-VK11
KH 112 P ES	KH 112 P FS ES	KH 112 P FO ES	G 1½"	40	120	6	12
KH 20 P ES	KH 20 P FS ES	KH 20 P FO ES	G 2"	50	140	12	12
KH 212 P ES	KH 212 P FS ES	KH 212 P FO ES	G 2½"	65	185	12-F07	12-F07
KH 30 P ES	KH 30 P FS ES	KH 30 P FO ES	G 3"	80	205	12-F07	25-F07
KH 40 P ES	KH 40 P FS ES	KH 40 P FO ES	G 4"	100	240	50-F10	50-F10

* for dimensions and replacement actuators see page 310

☞ **Order example:** KH 38 P ES ** **

Standard type

Designation for the actuator options:
FKM seal . . . . . **-V**

Designation for the ball valve options:
Welding ends . . . . . **-AS**

for Namur connection and female thread

Warning: With high media temperatures the actuator must be protected by a thermal bridge!

High pressure ball valves with pneumatic rotary actuators — up to 500 bar

Ball valve
Materials: Housing: Zinc-plated steel, ball: Steel hard chrome-plated, ball seal: POM, selector shaft seal: NBR
Temperature range: -20°C to max. +100°C (G 1 ¼" - G 2": -10°C to max. +80°C)
Operating range: Hydraulic oil, heating oil (water only after release by us)
☞ **Optional:** Ball valve made of stainless steel AISI 316Ti **-ES**
Rotary actuator: See above

Type double acting	Type spring closing	Type spring opening	G	DN	Install. length ball valve	PN	Actuator size* Double act.	Single act.
KH 14 HD P	KH 14 HD P FS	KH 14 HD P FO	G ¼"	6	69	500 bar	2-F03	2-F03
KH 38 HD P	KH 38 HD P FS	KH 38 HD P FO	G ⅜"	10	72	500 bar	2-F03	2-F03
KH 12 HD P	KH 12 HD P FS	KH 12 HD P FO	G ½"	13	83	500 bar	2-F03	2-F03
KH 34 HD P	KH 34 HD P FS	KH 34 HD P FO	G ¾"	20	95	420 bar	6	6
KH 10 HD P	KH 10 HD P FS	KH 10 HD P FO	G 1"	25	113	315 bar	12	12
KH 114 HD P	KH 114 HD P FS	KH 114 HD P FO	G 1¼"	32	110	420 bar	12	12
KH 112 HD P	KH 112 HD P FS	KH 112 HD P FO	G 1½"	40	130	420 bar	12	25
KH 20 HD P	KH 20 HD P FS	KH 20 HD P FO	G 2"	50	140	420 bar	25	25

* for dimensions and replacement actuators see page 310

☞ **Order example:** KH 14 HD P **

Standard type

Designation for the actuator options:
Ball valve made of stainless steel . . . . **-ES**

3-way ball valves with pneumatic rotary actuators — PN 40

Ball valve
Materials: Housing: Brass nickel-plated, ball: Brass hard chrome-plated, seal: PTFE/NBR
Temperature range: -10°C to max. +100°C
Properties: Pressure inlet is possible from all the three sides.
Operating range: Water, oil, compressed air, fuels, heating oil, solvents, weak acids and alkalis
Rotary actuator
Design: ATEX-compliant ⟨Ex⟩ II 2GD c 85°C (Actuators with size 12 or greater: ⟨Ex⟩ II 2GD c 110°C)
Materials: Housing: Aluminium anodised, gear rack and piston: Aluminium, cover: Acetal resin, seal: NBR
Temperature range: -20°C to max. +80°C
Control pressure: 6 - 10 bar (lower pressures upon request)
☞ **Optional:** FKM seal **-V**, direction of rotation changed **-FO**

for Namur connection and female thread

Warning: In case of high media temperatures, the actuator must be cooled!

Type double acting	Type single acting	Thread ball valve	DN	Installation length ball valve	Actuator size* Double act.	Single act.
KH 3/14 ** P	KH 3/14 ** PE	G 1/4"	10	76	1	2-F03
KH 3/38 ** P	KH 3/38 ** PE	G 3/8"	10	78	1	2-F03
KH 3/12 ** P	KH 3/12 ** PE	G 1/2"	10	82	1	2-F03
KH 3/34 ** P	KH 3/34 ** PE	G 3/4"	15	90	2-F03	2-F03
KH 3/10 ** P	KH 3/10 ** PE	G 1"	20	106	6-VK11	6-VK11
KH 3/114 ** P	KH 3/114 ** PE	G 1 1/4"	25	120	6-VK11	6-VK11
KH 3/112 ** P	KH 3/112 ** PE	G 1 1/2"	32	142	6	12
KH 3/20 ** P	KH 3/20 ** PE	G 2"	40	165	12	12

* for dimensions and replacement actuators see page 310, ** please indicate switching position. See table below (standard position L or T1)

☞ **Order example:** KH 3/38 ** P **
Standard type
Switching position (see table below)

Designation for the actuator options:
FKM seal . . . . . **-V**
Direction of rotation changed . . . . . **-FO**

Stainless steel 3-way ball valves with pneumatic rotary actuators — PN 63

Ball valve
Materials: Housing: AISI 316, ball: AISI 316, seal: PTFE (15% GF)/FKM
Temperature range: -20°C to max. +180°C
Properties: Pressure inlet is possible from all the three sides
Operating ranges: Water, oil, compressed air, vacuum (max. -0.9 bar), fuels, solvents, aggressive media
☞ **Optional:** Certificate 3.1
Rotary actuator
Design: ATEX-compliant ⟨Ex⟩ II 2GD c 85°C (Actuators with size 12 or greater: ⟨Ex⟩ II 2GD c 110°C)
Materials: Housing: Aluminium anodised, gear rack and piston: Aluminium, cover: Acetal resin, seals: NBR
Temperature range: -20°C to max. +80°C
Control pressure: 6 - 10 bar (lower pressures upon request)
☞ **Optional:** FKM seals **-V**, direction of rotation changed **-FO**

TA LUFT

for Namur connection and female thread

Warning: In case of high media temperatures, the actuator must be cooled!

Type double acting	Type single acting	Thread ball valve	DN	Installation length ball valve	Actuator size* Double act.	Single act.
KH 3/14 ** P ES	KH 3/14 ** PE ES	G 1/4"	11	79	2-F03	2-F03
KH 3/38 ** P ES	KH 3/38 ** PE ES	G 3/8"	12	79	2-F03	2-F03
KH 3/12 ** P ES	KH 3/12 ** PE ES	G 1/2"	12	79	2-F03	2-F03
KH 3/34 ** P ES	KH 3/34 ** PE ES	G 3/4"	15	88	2-F03	6-F04-VK9
KH 3/10 ** P ES	KH 3/10 ** PE ES	G 1"	20	108	6-VK11	6-VK11
KH 3/114 ** P ES	KH 3/114 ** PE ES	G 1 1/4"	25	124	6-VK11	6-VK11
KH 3/112 ** P ES	KH 3/112 ** PE ES	G 1 1/2"	32	135	6	12
KH 3/20 ** P ES	KH 3/20 ** PE ES	G 2"	40	164	12	25

* for dimensions and replacement actuators see page 310, ** please indicate switching position. See table below (standard position L or T1)

☞ **Order example:** KH 3/38 ** P ES **
Standard type
Switching position (see table below)

Designation for the actuator options:
FKM seal . . . . . **-V**
Direction of rotation changed . . . . . **-FO**

	Standard	Option -FO	L borehole	T borehole			
Position	activated	non activated					
	non activated	activated					
Switching position			L	T1	T2	T3	T4

Pneumatically actuated ball valves

Compact flanged ball valves with pneumatic rotary actuators — PN 16/40

for Namur connection and female thread

For more flange dimensions see page 262.

Ball valve
Materials: Housing: Steel, ball: AISI 316, seal: PTFE/FKM
Temperature range: -20°C to max. +180°C
Operating range: Water, oil, compressed air, vacuum (max. - 0.9 bar), fuels, solvents
Rotary actuator
Design: ATEX-compliant Ⓔx II 2GD c 85°C (Actuators with size 12 or greater: Ⓔx II 2GD c 110°C)
Materials: Housing: Aluminium anodised, gear rack and piston: Aluminium, cover: Acetal resin, seals: NBR
Control pressure: 6-10 bar (lower pressures upon request)
Temperature range: -20°C to max. +80°C
☞ **Optional:** FKM seals **-V**

Warning: In case of high media temperatures, the actuator must be cooled!

Type double acting	Type spring closing	Type spring opening	DN	Install. length ball valve ±2	PN	Actuator size* Double act.	Single act.
KHFLK 15/40 P	KHFLK 15/40 P FS	KHFLK 15/40 P FO	15	39	16/40	2-F03	2-F03
KHFLK 20/40 P	KHFLK 20/40 P FS	KHFLK 20/40 P FO	20	44	16/40	2-F03	2-F03
KHFLK 25/40 P	KHFLK 25/40 P FS	KHFLK 25/40 P FO	25	49	16/40	2	6-F04
KHFLK 32/40 P	KHFLK 32/40 P FS	KHFLK 32/40 P FO	32	56	16/40	6-F04	6-F04
KHFLK 40/40 P	KHFLK 40/40 P FS	KHFLK 40/40 P FO	40	65	16/40	6	6
KHFLK 50/40 P	KHFLK 50/40 P FS	KHFLK 50/40 P FO	50	73	16/40	6	12
KHFLK 65/16 P	KHFLK 65/16 P FS	KHFLK 65/16 P FO	65	94	16	12-F07	12-F07
KHFLK 80/16 P	KHFLK 80/16 P FS	KHFLK 80/16 P FO	80	116	16	25-F07	25-F07
KHFLK 100/16 P	KHFLK 100/16 P FS	KHFLK 100/16 P FO	100	140	16	50-F10	50-F10

* for dimensions and replacement actuators see page 310

☞ **Order example:** KHFLK 15/40 P **
Standard type
Designation for the actuator options:
FKM seal . . . . . **-V**

Stainless steel compact flanged ball valves with pneumatic rotary actuators PN 16/40

TA LUFT

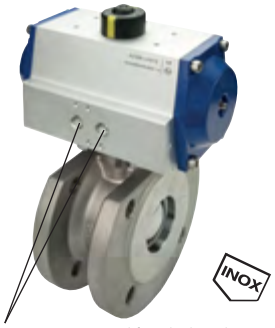

for Namur connection and female thread

For more flange dimensions see page 262.

Ball valve
Materials: Housing: AISI 316, ball: AISI 316, seal: PTFE
Temperature range: -20°C to max. +180°C
Operating range: Water, oil, compressed air, vacuum (max. -0.9 bar), fuels, solvents, aggressive media
Rotary actuator
Design: ATEX-compliant Ⓔx II 2GD c 85°C (Actuators with size 12 or greater: Ⓔx II 2GD c 110°C)
Materials: Housing: Aluminium anodised, gear rack and piston: Aluminium, cover: Acetal resin, seals: NBR
Control pressure: 6 - 10 bar (lower pressures upon request)
Temperature range: -20°C to max. +80°C
☞ **Optional:** FKM seals **-V**

Warning: In case of high media temperatures, the actuator must be cooled!

Type double acting	Type spring closing	Type spring opening	DN	Install. length ball valve	PN	Actuator size* Double act.	Single act.
KHFLK 15/40 P ES	KHFLK 15/40 P FS ES	KHFLK 15/40 P FO ES	15	42	16/40	2-F03	2-F03
KHFLK 20/40 P ES	KHFLK 20/40 P FS ES	KHFLK 20/40 P FO ES	20	44	16/40	2-F03	2-F03
KHFLK 25/40 P ES	KHFLK 25/40 P FS ES	KHFLK 25/40 P FO ES	25	50	16/40	2	6-F04
KHFLK 32/40 P ES	KHFLK 32/40 P FS ES	KHFLK 32/40 P FO ES	32	60	16/40	6-VK11	6-VK11
KHFLK 40/40 P ES	KHFLK 40/40 P FS ES	KHFLK 40/40 P FO ES	40	65	16/40	6	6
KHFLK 50/40 P ES	KHFLK 50/40 P FS ES	KHFLK 50/40 P FO ES	50	80	16/40	12	12
KHFLK 65/16 P ES	KHFLK 65/16 P FS ES	KHFLK 65/16 P FO ES	65	110	16	12-F07	12-F07
KHFLK 80/16 P ES	KHFLK 80/16 P FS ES	KHFLK 80/16 P FO ES	80	120	16	25-F07	25-F07
KHFLK 100/16 P ES	KHFLK 100/16 P FS ES	KHFLK 100/16 P FO ES	100	150	16	50-F10	50-F10

* for dimensions and replacement actuators see page 310

☞ **Order example:** KHFLK 15/40 P ES **
Standard type
Designation for the actuator options:
FKM seal . . . . . **-V**

Flanged ball valves, 2-piece, with pneumatic rotary actuators PN 16/40

Ball valve
Materials: **PN 16:** Housing: GG25, ball: Cast steel chrome-plated, seal: PTFE/NBR
PN 40: Housing: Cast steel, ball: Stainless steel, seal: PTFE/FKM
Length acc. to DIN 3202-F4 (DIN EN 558-1, row 14) (from DN 200 acc. to DIN 3202-F5, DIN EN 558-1, row 15)
Temperature range: -20°C to max. +120°C
Operating range: Water, oil, compressed air, vacuum (max. -0.9 bar), fuels, solvents
Rotary actuator
Design: ATEX-compliant ⟨Ex⟩ II 2GD c 85°C (Actuators with size 12 or greater: ⟨Ex⟩ II 2GD c 110°C)
Materials: Housing: Aluminium anodised, gear rack and piston: Aluminium, cover: Acetal resin, seals: NBR
Temperature range: -20°C to max. +80°C
Control pressure: 6 - 10 bar (lower pressures upon request)
☞ **Optional:** FKM seals **-V**

Warning: In case of high media temperatures, the actuator must be cooled!

for Namur connection and female thread

For more flange dimensions see page 262.

Type double acting	Type spring closing	Type spring opening	DN	Installation length ball valve	Actuator size* Double act.	Single act.
KHFL 25/** P	KHFL 25/** P FS	KHFL 25/** P FO	25	125	6-VK11	6-VK11
KHFL 32/** P	KHFL 32/** P FS	KHFL 32/** P FO	32	130	6-VK11	6-VK11
KHFL 40/** P	KHFL 40/** P FS	KHFL 40/** P FO	40	140	6	6
KHFL 50/** P	KHFL 50/** P FS	KHFL 50/** P FO	50	150	6	12
KHFL 65/** P	KHFL 65/** P FS	KHFL 65/** P FO	65	170	12-F07	12-F07
KHFL 80/** P	KHFL 80/** P FS	KHFL 80/** P FO	80	180	50-VK22	50-VK22
KHFL 100/** P	KHFL 100/** P FS	KHFL 100/** P FO	100	190	50-VK22	50-VK22
KHFL 125/16 P	KHFL 125/16 P FS	KHFL 125/16 P FO	125	200	90	90
KHFL 150/16 P	KHFL 150/16 P FS	KHFL 150/16 P FO	150	210	90	130
KHFL 200/16 P	KHFL 200/16 P FS	KHFL 200/16 P FO	200	400	130-F12	180-F14

* for dimensions and replacement actuators see page 310

☞ **Order example:** KHFL 25/** P **

Standard type

Designation for the actuator options:
FKM seal . . . . . **-V**

Nominal pressure
PN 16 . . . . . **-16**
PN 40 . . . . . **-40**

Stainless steel flanged ball valves, 2-piece, with pneumatic rotary actuators PN 16/40

Ball valve
Materials: Housing: AISI 316, ball: AISI 316, seal: PTFE/FKM
Temperature range: -20°C to max. +180°C
Operating range: Water, oil, compressed air, vacuum (max. -0.9 bar), fuels, solvents, aggressive media
Length according to DIN 3202-F4 (DIN EN 558-1, row 14) (from DN 125 according to DIN 3202-F5, DIN EN 558-1, row 15), Fire Safe Design
☞ **Optional:** Certificate 3.1
Rotary actuator
Design: ATEX-compliant ⟨Ex⟩ II 2GD c 85°C (Actuators with size 12 or greater: ⟨Ex⟩ II 2GD c 110°C)
Materials: Housing: Aluminium anodised, gear rack and piston: Aluminium, cover: Acetal resin, seals: NBR
Temperature range: -20°C to max. +80°C
Control pressure: 6 - 10 bar (lower pressures upon request)
☞ **Optional:** FKM seals **-V**

TA LUFT

Warning: In case of high media temperatures, the actuator must be cooled!

for Namur connection and female thread

For more flange dimensions see page 262.

Type double acting	Type spring closing	Type spring opening	DN	Install. length ball valve	Actuator size* Double act.	Single act.
KHFL 15/** P ES	KHFL 15/** P FS ES	KHFL 15/** P FO ES	15	115	2-F03	6-F04-VK9
KHFL 20/** P ES	KHFL 20/** P FS ES	KHFL 20/** P FO ES	20	120	2-F03	6-F04-VK9
KHFL 25/** P ES	KHFL 25/** P FS ES	KHFL 25/** P FO ES	25	125	6-F04	6-F04
KHFL 32/** P ES	KHFL 32/** P FS ES	KHFL 32/** P FO ES	32	130	6-F04	12-VK11
KHFL 40/** P ES	KHFL 40/** P FS ES	KHFL 40/** P FO ES	40	140	12	12
KHFL 50/** P ES	KHFL 50/** P FS ES	KHFL 50/** P FO ES	50	150	12	12
KHFL 65/** P ES	KHFL 65/** P FS ES	KHFL 65/** P FO ES	65	170	12-F07	25-F07
KHFL 80/** P ES	KHFL 80/** P FS ES	KHFL 80/** P FO ES	80	180	25-F07	50
KHFL 100/** P ES	KHFL 100/** P FS ES	KHFL 100/** P FO ES	100	190	50-F10	50-F10
KHFL 125/** P ES	KHFL 125/** P FS ES	KHFL 125/** P FO ES	125	325	90	90
KHFL 150/** P ES	KHFL 150/** P FS ES	KHFL 150/** P FO ES	150	350	90	130
KHFL 200/** P ES	KHFL 200/** P FS ES	KHFL 200/** P FO ES	200	400	180-F14	205-F14
KHFL 250/16 P ES	KHFL 250/16 P FS ES	KHFL 250/16 P FO ES	250	450	205-F14	205-F14
KHFL 300/16 P ES	KHFL 300/16 P FS ES	KHFL 300/16 P FO ES	300	500	380-F16	630-F14

* for dimensions and replacement actuators see page 310

☞ **Order example:** KHFL 25/** P ES **

Standard type

Designation for the actuator options:
FKM seal . . . . . **-V**

Nominal pressure
PN 16 . . . . . **-16**
PN 40 (up to DN 200) . . . **-40**

Pneumatically actuated ball valves

Stainless steel flanged ball valves, 3-piece, with pneumatic rotary actuators PN 16/40

for Namur connection and female thread

For more flange sizes see page 262.

Ball valve
Materials: Housing: AISI 316, ball: AISI 316, seal: PTFE (15% GF)
Length according to DIN 3202-F1
Temperature range: -20°C to max. +180°C
Operating range: Water, oil, compressed air, vacuum (max. -0.9 bar), fuels, solvents, aggressive media
☞ **Optional:** Certificate 3.1

Rotary actuator
Design: ATEX-compliant ⟨Ex⟩ II 2GD c 85°C (Actuators with size 12 or greater: ⟨Ex⟩ II 2GD c 110°C)
Materials: Housing: Aluminium anodised, gear rack and piston: Aluminium, cover: Acetal resin, seals: NBR
Temperature range: -20°C to max. +80°C
Control pressure: 6-10 bar (lower pressures upon request)
☞ **Optional:** FKM seals **-V**

Warning: In case of high media temperatures, the actuator must be cooled!

Type double acting	Type spring closing	Type spring opening	DN	Install. length ball valve	Actuator size* Double act.	Single act.
KHFL 153/** P ES	KHFL 153/** P FS ES	KHFL 153/** P FO ES	15	130	1	2-F03
KHFL 203/** P ES	KHFL 203/** P FS ES	KHFL 203/** P FO ES	20	150	1	2-F03
KHFL 253/** P ES	KHFL 253/** P FS ES	KHFL 253/** P FO ES	25	160	2	6-F04
KHFL 323/** P ES	KHFL 323/** P FS ES	KHFL 323/** P FO ES	32	180	6-VK11	6-VK11
KHFL 403/** P ES	KHFL 403/** P FS ES	KHFL 403/** P FO ES	40	200	6	6
KHFL 503/** P ES	KHFL 503/** P FS ES	KHFL 503/** P FO ES	50	230	12	12
KHFL 653/** P ES	KHFL 653/** P FS ES	KHFL 653/** P FO ES	65	290	12-F07	12-F07
KHFL 803/** P ES	KHFL 803/** P FS ES	KHFL 803/** P FO ES	80	310	12-F07	25-F07
KHFL 1003/** P ES	KHFL 1003/** P FS ES	KHFL 1003/** P FO ES	100	350	50-F10	50-F10

* for dimensions and replacement actuators see page 310

☞ **Order example:** KHFL 253/** P ES **

Standard type

Nominal pressure
PN 16 . . . . . -16
PN 40 . . . . . -40

Designation for the actuator options:
FKM seal . . . . . -V

EN 331

Brass ball valves with full throughway and direct assembly flanges up to 40 bar

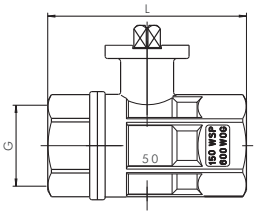

Materials: Housing: Brass nickel-plated, ball: Brass hard chrome-plated, seal: PTFE/FKM, manufactured silicone-free (G 1/2" - G 2"), length according to DIN 3202-M3 (G 1/2" - G 2"), DVGW approval for G 1/2" - G 2" (PN 5/MOP 5)
Temperature range: -20°C to max. +160°C (G 2 1/2" - G 4": max. +120°C), gas: -20°C to max. +60°C
Operating range: Water, oil, compressed air, vacuum (max. -0.9 bar), fuels, heating oil, solvents, weak acids and alkalis, G 1/2" - G 2": Gases in accordance with DVGW worksheet (such as natural gas, city gas, liquid gas up to 5 bar)

Advantages: • An actuator can be fitted to the assembly flange to automate the operation of the ball valve.

Warning: Please check which temperatures the actuator you are installing is authorised to work in.

Type	G	DN	L	ISO 5211*	PN
KH 14 F MS	Rp 1/4"	10	67	F 03	40 bar
KH 38 F MS	Rp 3/8"	14	67	F 03	40 bar
KH 12 F MS	G 1/2"	15	75	F 03	40 bar
KH 34 F MS	G 3/4"	20	80	F 03	40 bar
KH 10 F MS	G 1"	25	90	F 03	40 bar
KH 114 F MS	G 1 1/4"	32	110	F 05-VK11	40 bar
KH 112 F MS	G 1 1/2"	40	120	F 05-VK11	40 bar
KH 20 F MS	G 2"	50	140	F 05	40 bar
KH 212 F MS	G 2 1/2"	65	165	F 05 / F 07-VK14	30 bar
KH 30 F MS	G 3"	76	188	F 07-VK14	25 bar
KH 40 F MS	Rp 4"	90	200	F 07-VK14	20 bar

* for assembly flange dimensions see page 309

TA LUFT

Stainless steel ball valves, 3-piece, full throughway and direct assembly flanges PN 63

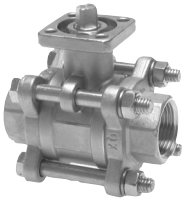

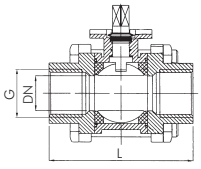

The pressure-temperature diagram is found in our Online Shop.

Materials: Housing: AISI 316, ball: AISI 316, seal: PTFE (15% GF)/FKM
Length according to DIN 3202-M3, assembly flange according to ISO 5211
Temperature range: -20°C to max. +180°C
Operating range: Water, oil, compressed air, vacuum (max. -0.9 bar), fuels, solvents, aggressive media

Advantages: • An actuator can be fitted to the assembly flange to automate the operation of the ball valve.

Warning: Please check which temperatures the actuator you are installing is authorised to work in.

Type (INOX)	G	DN	L	ISO 5211*
KH 143 F ES	G 1/4"	10	60	F 03 / F 04-VK9
KH 383 F ES	G 3/8"	12	60	F 03 / F 04-VK9
KH 123 F ES	G 1/2"	15	75	F 03 / F 04-VK9
KH 343 F ES	G 3/4"	20	80	F 03 / F 04-VK9 / F 05-VK9
KH 103 F ES	G 1"	25	90	F 04 / F 05-VK11
KH 1143 F ES	G 1 1/4"	32	110	F 04 / F 05-VK11 / F 07-VK11
KH 1123 F ES	G 1 1/2"	40	120	F 05 / F 07-VK14
KH 203 F ES	G 2"	50	140	F 05 / F 07-VK14
KH 2123 F ES	G 2 1/2"	65	185	F 07 / F 10-VK17
KH 303 F ES	G 3"	80	205	F 07 / F 10-VK17
KH 403 F ES	G 4"	100	240	F 10

* for assembly flange dimensions see page 309

Brass 3-way ball valves with assembly flanges according to ISO 5211 PN 40

Materials: Housing: Brass nickel-plated, ball: Brass hard chrome-plated, seal: PTFE/NBR
Assembly flange conforming to ISO 5211
Temperature range: -10°C to max. +100°C
Properties: Pressure inlet is possible from all the three sides
Operating range: Water, oil, compressed air, fuels, heating oil, solvents, weak acids and alkalis

✓ **Advantages:** • An actuator can be fitted to the assembly flange to automate the operation of the ball valve.

Warning: Please check which temperatures the actuator you are installing is authorised to work in.

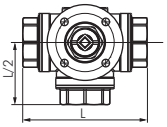

Type ⊾ L borehole	Type ⊢ T borehole	G	DN	L	ISO 5211*
KH 3/14 LF MS	KH 3/14 TF MS	G 1/4"	10	76	F 03
KH 3/38 LF MS	KH 3/38 TF MS	G 3/8"	10	78	F 03
KH 3/12 LF MS	KH 3/12 TF MS	G 1/2"	10	82	F 03
KH 3/34 LF MS	KH 3/34 TF MS	G 3/4"	15	90	F 03
KH 3/10 LF MS	KH 3/10 TF MS	G 1"	20	106	F 05-VK11
KH 3/114 LF MS	KH 3/114 TF MS	G 1 1/4"	25	120	F 05-VK11
KH 3/112 LF MS	KH 3/112 TF MS	G 1 1/2"	32	142	F 05
KH 3/20 LF MS	KH 3/20 TF MS	G 2"	40	165	F 05

* for assembly flange dimensions see below.

Stainless steel 3-way ball valves with assembly flanges according to ISO 5211 PN 63

TA LUFT

INOX

Materials: Housing: AISI 316, ball: AISI 316, seal: PTFE (15% GF)/FKM
Assembly flange conforming to ISO 5211
Temperature range: -20°C to max. +180°C
Properties: Pressure inlet is possible from all the three sides
Operating range: Water, oil, compressed air, vacuum (max. -0.9 bar), fuels, solvents, aggressive media
☞ **Optional:** 3.1 b Certificate

✓ **Advantages:** • An actuator can be fitted to the assembly flange to automate the operation of the ball valve.

Warning: Please check which temperatures the actuator you are installing is authorised to work in.

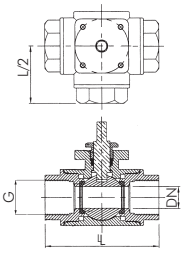

The pressure-temperature diagram is found in our Online Shop.

Type ⊾ INOX L borehole	Type ⊢ INOX T borehole	G	DN	L	ISO 5211*
KH 3/14 LF ES	KH 3/14 TF ES	G 1/4"	11	79	F 03 / F 04-VK9
KH 3/38 LF ES	KH 3/38 TF ES	G 3/8"	12	79	F 03 / F 04-VK9
KH 3/12 LF ES	KH 3/12 TF ES	G 1/2"	12	79	F 03 / F 04-VK9
KH 3/34 LF ES	KH 3/34 TF ES	G 3/4"	15	88	F 03 / F 04-VK9 / F 05-VK9
KH 3/10 LF ES	KH 3/10 TF ES	G 1"	20	108	F 04 / F 05-VK11
KH 3/114 LF ES	KH 3/114 TF ES	G 1 1/4"	25	124	F 04 / F 05-VK11 / F 07-VK11
KH 3/112 LF ES	KH 3/112 TF ES	G 1 1/2"	32	135	F 05 / F 07-VK14
KH 3/20 LF ES	KH 3/20 TF ES	G 2"	40	164	F 05 / F 07-VK14

* for assembly flange dimensions see below.

Pneumatic rotary actuators

Pneumatic rotary actuators

- Mounting flange acc. to ISO 5211
- Actuator connection with polygon acc. to DIN 3337
- Connection for solenoid valve acc. to VDI/VDE 3845 (NAMUR) or via threads
- Connection for position controller or limit switch box acc. to VDI/VDE 3845 (NAMUR)
- Visual display acc. to NAMUR
- Design ATEX-compliant ⟨Ex⟩ II 2GD c 85°C (Actuators with size 12 or greater: ⟨Ex⟩ II 2GD c 110°C)

Materials: Housing: Aluminium anodised, gear rack and piston: Aluminium, cover: Acetal resin (from size 12: aluminium), seals: NBR
Temperature range: -20°C to max. +80°C
Control pressure: 6 - 10 bar (lower pressures upon request)
☞ **Optional:** FKM seals (-20°C to max. +120°C, sizes 12 up to 130: to max. +150°C) **-V**

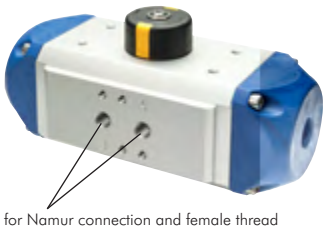

for Namur connection and female thread

Type **wear part set type PDD/PDE**
PD 001 REP
PD 002 REP
PD 006 REP
PD 012 REP
PD 025 REP
PD 050 REP
PD 090 REP
PD 130 REP

Type **repl. spring set for type PDE**
PDE 002 REP FEDER
PDE 006 REP FEDER
PDE 012 REP FEDER
PDE 025 REP FEDER
PDE 050 REP FEDER
PDE 090 REP FEDER
PDE 130 REP FEDER

☞ **Order example:** PDD 001 **
Standard type

Designation for the actuator options:
FKM seal . . . . . **-V**

Type **double acting**	Type **spring closing**	Type **spring opening**	Wiring diagram for ball valve (ISO 5211)	Square	Wiring diagram for limit switch or position controller	Air connection (NAMUR)	Size
PDD 001	---	---	F 03	9	50 x 25	G 1/8"	1
PDD 002	PDE 002	PDE 002-FO	F 04	11	50 x 25	G 1/8"	2
PDD 002-F03	PDE 002-F03	PDE 002-FO-F03	F 03	9	50 x 25	G 1/8"	2
PDD 002-F04-VK9	PDE 002-F04-VK9	PDE 002-FO-F04-VK9	F 04	9	50 x 25	G 1/8"	2
PDD 006	PDE 006	PDE 006-FO	F 05	14	80 x 30	G 1/8"	6
PDD 006-F04-VK9	PDE 006-F04-VK9	PDE 006-FO-F04-VK9	F 04	9	80 x 30	G 1/8"	6
PDD 006-F04	PDE 006-F04	PDE 006-FO-F04	F 04	11	80 x 30	G 1/8"	6
PDD 006-VK9	PDE 006-VK9	PDE 006-FO-VK9	F 05	9	80 x 30	G 1/8"	6
PDD 006-VK11	PDE 006-VK11	PDE 006-FO-VK11	F 05	11	80 x 30	G 1/8"	6
PDD 012	PDE 012	PDE 012-FO	F 05	14	80 x 30	G 1/4"	12
PDD 012-VK11	PDE 012-VK11	PDE 012-FO-VK11	F 05	11	80 x 30	G 1/4"	12
PDD 012-F07-VK11	PDE 012-F07-VK11	PDE 012-FO-F07-VK11	F 07	11	80 x 30	G 1/4"	12
PDD 012-F07-VK14	PDE 012-F07-VK14	PDE 012-FO-F07-VK14	F 07	14	80 x 30	G 1/4"	12
PDD 012-F07	PDE 012-F07	PDE 012-FO-F07	F 07	17	80 x 30	G 1/4"	12
PDD 025	PDE 025	PDE 025-FO	F 05	14	80 x 30	G 1/4"	25
PDD 025-VK11	PDE 025-VK11	PDE 025-FO-VK11	F 05	11	80 x 30	G 1/4"	25
PDD 025-F07-VK11	PDE 025-F07-VK11	PDE 025-FO-F07-VK11	F 07	11	80 x 30	G 1/4"	25
PDD 025-F07-VK14	PDE 025-F07-VK14	PDE 025-FO-F07-VK14	F 07	14	80 x 30	G 1/4"	25
PDD 025-F07	PDE 025-F07	PDE 025-FO-F07	F 07	17	80 x 30	G 1/4"	25
PDD 050	PDE 050	PDE 050-FO	F 07	17	80 x 30	G 1/4"	50
PDD 050-VK22	PDE 050-VK22	PDE 050-FO-VK22	F 07	22	80 x 30	G 1/4"	50
PDD 050-F10	PDE 050-F10	PDE 050-FO-F10	F 10	22	80 x 30	G 1/4"	50
PDD 090	PDE 090	PDE 090-FO	F 10	22	80/130 x 30	G 1/4"	90
PDD 090-VK27	PDE 090-VK27	PDE 090-FO-VK27	F 10	27	80/130 x 30	G 1/4"	90
PDD 090-F12-VK22	PDE 090-F12-VK22	PDE 090-FO-F12-VK22	F 12	22	80/130 x 30	G 1/4"	90
PDD 090-F12-VK27	PDE 090-F12-VK27	PDE 090-FO-F12-VK27	F 12	27	80/130 x 30	G 1/4"	90
PDD 130	PDE 130	PDE 130-FO	F 10	22	80/130 x 30	G 1/4"	130
PDD 130-F12-VK22	PDE 130-F12-VK22	PDE 130-FO-F12-VK22	F 12	22	80/130 x 30	G 1/4"	130
PDD 130-F12	PDE 130-F12	PDE 130-FO-F12	F 12	27	80/130 x 30	G 1/4"	130

The connection dimensions given above are suited for most ball valves. However, as there are a large number of variations, please send us the following information and we will indentify the correct valve / spare parts for you:

☞ Ball valve type
☞ Wiring diagram on ball valve (ISO 5211) - dimension A and B
☞ Size of the square - dimension C
☞ Required torque (if known)

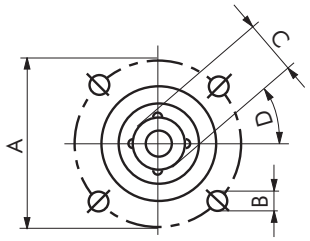

Standard measurements ISO 5211

ISO 5211	A	B	C	D
F 03	36	M 5	9	45°
F 04	42	M 5	11	45°
F 05	50	M 6	14	45°
F 07	70	M 8	17	45°
F 10	102	M 10	22	45°
F 12	125	M 12	27	45°

Torques for double acting actuators

	Supply air pressure in bar						
	2	3	4	5	6	7	8
Size	Nm	Nm	Nm	Nm	Nm	Nm	Nm
1	2.48	3.72	4.96	6.2	7.44	8.68	9.92
2	5.4	8.1	10.8	13.5	16.2	18.9	21.6
6	12.4	18.8	24.8	31	37.2	43.4	49.6
12	24.7	37	49.3	61.6	74	86.3	98.6
25	47	71	95	119	143	167	190
50	89	133	177	222	266	310	354

Torques for single acting actuators

	2.5 - 2.9		3.0 - 3.9		4.0 - 4.9		5.0 - 5.9 (Standard)		6.0 - 6.9		7.0 - 7.9	
Size	Nm	No. of springs	Nm	No. of springs	Nm	No. of springs	Nm	No. of springs	Nm	No. of springs	Nm	No. of springs
2	1.8	4	2.7	6	3.6	8	4.5	10	5.4	12	6.3	14
6	4.1	4	6.1	6	8.2	8	10.3	10	12.3	12	14.4	14
12	10	4	12	6	16	8	20	10	24	12	28	14
25	21	4	24	6	31	8	39	10	47	12	55	14
50	37	4	44	6	59	8	74	10	88	12	103	14

Accessories for pneumatic rotary actuators

Reducing sleeves for square drives of rotary actuators

Materials: Sintered metal, corrosion protected
Application: To reduce the female square of pneumatic or electric actuators or to enlarge the male square of fittings.
Squares in accordance to ISO 5211 - DIN 3337 - NAMUR with rounded corners and small tolerance range

Type	A	B	C	D	E
PDR 1109	11	9	12.2	14.3	10
PDR 1409	14	9	12.2	18	16
PDR 1410	14	10	13.4	18	16
PDR 1411	14	11	14.3	18	16
PDR 1711	17	11	14.3	22	17
PDR 1714	17	14	18.3	22	17
PDR 2217	22	17	22.5	28	22
PDR 2722	27	22	28.5	36	27
PDR 3627	36	27	36.0	45	36

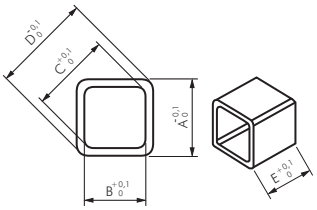

Universal signal boxes for pneumatic rotary actuators — Compact

drilling pattern
80 x 30
130 x 30

Materials: Housing: PA, cover: Lexan 143 R, selector shaft: POM, seals: NBR, no metal parts
Temperature range: -20°C to max. +70°C
Protection class: IP 67
Connection dimensions: Fits on drilling patterns 80 x 30 and 130 x 30 (not on actuators with size 1 and 2), shaft height setting can be adjusted between 20, 30, 40 and 50 mm

Advantages: • Widely visible position indicator RED/GREEN
• Display on drilling pattern of the ball valve is easily adjustable (T, L)

Type		Switch type	Switching capacity	Switch function
KH P END MC		Micro-switch	4V DC - 250V AC/1mA - 5A	2 toggle switches
KH P END IC		Inductive sensor	10 - 30V/100mA	2 NO contacts (PNP)
KH P END EX	⟨Ex⟩	Namur sensor	8V DC, I <1mA (3mA undampened)	2 NO contacts (⟨Ex⟩ II2G Ex ia IIB T6)

Universal signal boxes for pneumatic rotary actuators — Classic

drilling pattern
50 x 25
80 x 30
130 x 30

Materials: Housing: PA6, cover: Polycarbonate, selector shaft: PA6, seals: EPDM and NBR, assembly bridge: PA6, screws: AISI 304
Temperature range: -20°C to max. +80°C, type KH P END P: -10°C to max. +60°C
Protection class: IP 67
Connection dimensions: Fits on drilling patterns 50 x 25, 80 x 30, and 130 x 30, shaft height setting can be adjusted between 20 and 30 mm, fits on all current actuators
Warning: For assembly on actuators of size 1 in connection with Namur valve, it may be necessary to assemble a spacer plate (DR NAMUR DIS 6) between the valve and the actuator.

Type		Switch type	Switching capacity	Switch function
KH P END M		Micro-switch	250V AC/16A	2 toggle switches
KH P END I		Inductive sensor	10-30V DC/0-100mA	2 NO contacts (PNP)
KH P END X*	⟨Ex⟩	Namur sensor	8V DC, I <1mA (3mA undampened)	2 NO contacts (⟨Ex⟩ II2G EEx ia IIC T6)
KH P END P		3/2-way pneumatic valve (1 to 8 bar)		2 NC contacts

* Vestamid housing and cover

Universal signal boxes for pneumatic rotary actuators — Heavy Duty

drilling pattern
80 x 30
130 x 30

Materials: Housing: Aluminium die-casting, cover: Polycarbonate, selector shaft: Stainless steel, seals: NBR, assembly bridge: Steel painted, screws: Stainless steel/zinc-plated steel
Temperature range: -25°C to max. +85°C
Protection class: IP 67
Connection dimensions: Fits on drilling patterns 80 x 30 and 130 x 30, shaft height setting can be adjusted between 15 and 25 mm, fits on all current actuators.

Advantages: • Robust design
• Widely visible position indicator RED/YELLOW

Type	Switch type	Switching capacity	Switch function
KH P END MHD	Micro-switch	8 - 250V AC/DC/0.2 - 5A	2 toggle switches

Electrically actuated ball valves

Ball valves with electric rotary actuators (sanitary design) — up to 40 bar

Advantages:
- 2 additional limit switches
- Torque cut-off
- Variable voltage (DC or AC)
- Manual emergency operation
- Integrated heating in actuator housing

Ball valve
Materials: Housing: Brass nickel-plated, ball: Brass hard chrome-plated, ball seals: PTFE
Temperature range: -20°C to max. +95°C
Assembly flange conforming to ISO 5211
Operating range: Water, compressed air, vacuum (max. -0.9 bar), oils, fuels, heating oil, solvents, colours, paints, weak acids and alkalis

Rotary actuator
Electric rotary actuator with optical position indicator, manual emergency operation and switch room heating.
Two additional limit switches are installed for further control requirements. An electronic torque limiting unit prevents damage in the event of overload. The manual emergency operation can be done without dismantling the external cladding. Do not use upside down!
Temperature range: -20°C to max. +70°C
Voltage: Type 230: 110 - 240V AC/DC, **type 24:** 24V AC/DC, (actuators can be operated with AC and DC voltage).
Protection class: IP 65
Max. switchable pressure difference: 16 bar
Power-on time: 75%
Regulating time: Type 24: 19 sec., **type 230:** 16 sec.

Type **230** 110-240V AC/DC	Type **24** 24V AC/DC	Thread	DN	Install. length ball valve	PN*	Actuator size**
KH 14 ELS 230	KH 14 ELS 24	G 1/4"	10	65	40 bar	1-F03
KH 38 ELS 230	KH 38 ELS 24	G 3/8"	15	65	40 bar	1-F03
KH 12 ELS 230	KH 12 ELS 24	G 1/2"	15	65	40 bar	1-F03
KH 34 ELS 230	KH 34 ELS 24	G 3/4"	20	75	40 bar	1-F03
KH 10 ELS 230	KH 10 ELS 24	G 1"	25	86	40 bar	1-F05-VK9
KH 114 ELS 230	KH 114 ELS 24	G 1 1/4"	32	95	32 bar	1-F05-VK9
KH 112 ELS 230	KH 112 ELS 24	G 1 1/2"	40	101	30 bar	1-F05-VK11
KH 20 ELS 230	KH 20 ELS 24	G 2"	50	120	30 bar	1-F05-VK11

* max. switchable pressure difference: 16 bar, ** for dimensions and replacement actuators see page 310

Warning: With high media temperatures the actuator must be protected by a thermal bridge or cooled!

Ball valves with electric rotary actuators (industrial design) — up to 40 bar

Advantages:
- 2 additional limit switches
- Torque cut-off
- Variable voltage (DC or AC)
- Manual emergency operation
- Integrated heating in actuator housing

Ball valve
Materials: Housing: Brass nickel-plated, ball: Brass hard chrome-plated, seal: PTFE
Length according to DIN 3202-M3 (G 1/2" - G 2"), DVGW approval for G 1/2" - G 2" (PN 5/MOP 5)
Temperature range: -20°C to max. +160°C (G 2 1/2" - G 4": max. +120°C), gas: -20°C to max. +60°C
Operating range: Water, compressed air, vacuum (max. -0.9 bar), oils, fuels, heating oil, solvents, colours, paints, weak acids and alkalis

Rotary actuator
Electric rotary actuator with optical position indicator, manual emergency operation and switch room heating. Two additional limit switches are installed for further control requirements. An electronic torque limiting unit prevents damage in the event of overload. The manual emergency operation can be done without dismantling the external cladding. Do not use upside down!
Materials: Housing: PA 6
Temperature range: -20°C to max. +70°C
Voltage: Type 230: 24 - 240V AC/DC, (actuators can be operated with AC and DC voltage).
Protection class: IP 67
Power-on time: 75%
Regulating time: 10 to 14 sec.
☞ **Optional:** Regulating time 140 sec. (only for actuator size 2) **-140,** "Battery Safety Return" for emergency closing NC (standard configuration) or emergency opening NO (changeover using jumpers) in case of power failure **-BSR**

Type **230** 24-240V AC/DC	Thread	DN	Install. length ball valve	PN	Actuator size*
KH 14 ELi 230	Rp 1/4"	10	67	40 bar	2-F03
KH 38 ELi 230	Rp 3/8"	15	67	40 bar	2-F03
KH 12 ELi 230	G 1/2"	15	75	40 bar	2-F03
KH 34 ELi 230	G 3/4"	20	80	40 bar	2-F03
KH 10 ELi 230	G 1"	25	90	40 bar	2-F03
KH 114 ELi 230	G 1 1/4"	32	110	40 bar	2-F05-VK11
KH 112 ELi 230	G 1 1/2"	38	120	40 bar	2-F05-VK11
KH 20 ELi 230	G 2"	50	140	40 bar	2-F05
KH 212 ELi 230	G 2 1/2"	65	165	30 bar	4-F05
KH 30 ELi 230	G 3"	76	188	25 bar	4-F07-VK14
KH 40 ELi 230	Rp 4"	90	200	20 bar	4-F07-VK14

* for dimensions and replacement actuators see page 315

Warning: With high media temperatures the actuator must be protected by a thermal bridge or cooled!

☞ **Order example:** KH 14 ELi 230 **

Standard type

Designation for the options:
Regulating time 140 sec. (only for actuator size 2) . . **-140**
Battery Safety Return . . . . . **-BSR**

Stainless steel ball valves with electric rotary actuators — PN 63

TA LUFT

Advantages:
- 2 additional limit switches
- Torque cut-off
- Variable voltage (DC or AC)
- Manual emergency operation
- Integrated heating in actuator housing

Ball valve
Materials: Housing: AISI 316, ball: AISI 316, seal: PTFE (15% GF)/FKM, length according to DIN 3202-M3
Temperature range: -20°C to max. +180°C
Operating range: Water, oil, compressed air, vacuum (max. -0.9 bar), fuels, solvents, aggressive media
☞ **Optional:** Welding ends **-AS**, certificate 3.1

Rotary actuator
Electric rotary actuator with optical position indicator, manual emergency operation and switch room heating. Two additional limit switches are installed for further control requirements. An electronic torque limiting unit prevents damage in the event of overload. The manual emergency operation can be done without dismantling the external cladding. Do not use upside down!
Materials: Housing: PA 6
Temperature range: -20°C to max. +70°C
Voltage: Type 230: 24 - 240V AC/DC (actuator size 6: 85 - 240V AC/DC), (actuators can be operated with AC and DC voltage).
Protection class: IP 67
Power-on time: 75%
Regulating time: 10 to 14 sec. (actuator size 6: 34 sec.)
☞ **Optional:** Regulating time 140 sec. (only for actuator size 2) **-140,** "Battery Safety Return" for emergency closing NC (standard configuration) or emergency opening NO (changeover using jumpers) in case of power failure **-BSR**

Type **230** 24-240V AC/DC (INOX)	Thread	DN	Install. length ball valve	Actuator size*
KH 14 ELi 230 ES	G 1/4"	10	60	2-F03
KH 38 ELi 230 ES	G 3/8"	12	60	2-F03
KH 12 ELi 230 ES	G 1/2"	15	75	2-F03
KH 34 ELi 230 ES	G 3/4"	20	80	2-F03
KH 10 ELi 230 ES	G 1"	25	90	2-F05-VK11
KH 114 ELi 230 ES	G 1 1/4"	32	110	2-F05-VK11
KH 112 ELi 230 ES	G 1 1/2"	38	120	2-F05
KH 20 ELi 230 ES	G 2"	50	140	3-F05
KH 212 ELi 230 ES	G 2 1/2"	65	185	4-F07
KH 30 ELi 230 ES	G 3"	80	205	4-F07
KH 40 ELi 230 ES	G 4"	100	240	6-F10

* for dimensions and replacement actuators see page 315

Warning: With high media temperatures the actuator must be protected by a thermal bridge or cooled!

☞ **Order example:** KH 10 ELi 230 ES ** **
- Standard type
- **Designation for the actuator options:** Regulating time 140 sec. . . . . **-140**, Battery Safety Return . . . . . **-BSR**
- **Designation for the ball valve options:** Welding ends . . . . . **-AS**

High pressure ball valves with electric rotary actuators — up to 500 bar

Ball valve
Materials: Housing: Zinc-plated steel, ball: Steel hard chrome-plated, ball seal: POM, selector shaft seal: NBR
Temperature range: -20°C to max. +100°C (G 1 1/4" - G 2": -10°C to max. +80°C)
Operating range: Hydraulic oil, heating oil (water only after release by us)
☞ **Optional:** Ball valve made of stainless steel AISI 316Ti **-ES**

Rotary actuator
Electric rotary actuator with optical position indicator, manual emergency operation and switch room heating. Two additional limit switches are installed for further control requirements. An electronic torque limiting unit prevents damage in the event of overload. The manual emergency operation can be done without dismantling the external cladding. Do not use upside down!
Materials: Housing PA 6
Temperature range: -20°C to max. +70°C
Voltage: Type 230: 24 - 240V AC/DC, (actuators can be operated with AC and DC voltage).
Protection class: IP 67
Power-on time: 75%
Regulating time: 10 to 14 sec.
☞ **Optional:** Regulating time 140 sec. (only for actuator size 2) **-140,** "Battery Safety Return" for emergency closing NC (standard configuration) or emergency opening NO (changeover using jumpers) in case of power failure **-BSR**

Type **230** 24-240V AC/DC	Thread	DN	Install. length ball valve	PN	Actuator size*
KH 14 HD ELi 230	G 1/4"	6	69	500 bar	2-F03
KH 38 HD ELi 230	G 3/8"	10	72	500 bar	2-F03
KH 12 HD ELi 230	G 1/2"	13	83	500 bar	2-F03
KH 34 HD ELi 230	G 3/4"	20	95	420 bar	2-F05
KH 10 HD ELi 230	G 1"	25	113	315 bar	3-F05
KH 114 HD ELi 230	G 1 1/4"	32	110	420 bar	4-F05
KH 112 HD ELi 230	G 1 1/2"	40	130	420 bar	4-F05
KH 20 HD ELi 230	G 2"	50	140	420 bar	4-F05-VK 17

* for dimensions and replacement actuators see page 315

Warning: With high media temperatures the actuator must be protected by a thermal bridge or cooled!

☞ **Order example:** KH 14 HD ELi 230 ** **
- Standard type
- **Designation for the actuator options:** Regulating time 140 sec. . . . . **-140**, Battery Safety Return . . . . . **-BSR**
- **Designation for the ball valve options:** Ball valve made of stainless steel . . . **-ES**

Electrically actuated ball valves

3-way ball valves with electric rotary actuators — PN 40

Advantages:
- 2 additional limit switches
- Torque cut-off
- Variable voltage (DC or AC)
- Manual emergency operation
- Integrated heating in actuator housing

Ball valve
Materials: Housing: Brass nickel-plated, ball: Brass hard chrome-plated, seal: PTFE/NBR
Temperature range: -10°C to max. +100°C
Properties: Pressure inlet is possible from all the three sides.
Operating range: Water, oil, compressed air, fuels, heating oil, solvents, colours, paints, weak acids and alkalis

Rotary actuator
Electric rotary actuator with optical position indicator, manual emergency operation and switch room heating. Two additional limit switches are installed for further control requirements. An electronic torque monitoring unit prevents damage in the event of overload. The manual emergency operation can be done without dismantling the external cladding. Do not use upside down!
Materials: Housing: PA 6
Temperature range: -20°C to max. +70°C
Voltage: Type 230: 24 - 240V AC/DC, (actuators can be operated with AC and DC voltage).
Protection class: IP 67, **power-on time:** 75%, **regulating time:** 10 sec.
☞ **Optional:** Regulating time 140 sec. (only for actuator size 2) **-140,** "Battery Safety Return" for emergency closing NC (standard configuration) or emergency opening NO (changeover using jumpers) in case of power failure **-BSR**

Warning: With high media temperatures the actuator must be protected by a thermal bridge or cooled!

Type 230 24-240V AC/DC	Thread	DN	Install. length ball valve	Actuator size*
KH 3/14 ** ELi 230	G 1/4"	10	76	2-F03
KH 3/38 ** ELi 230	G 3/8"	10	78	2-F03
KH 3/12 ** ELi 230	G 1/2"	10	82	2-F03
KH 3/34 ** ELi 230	G 3/4"	15	90	2-F03
KH 3/10 ** ELi 230	G 1"	20	106	2-F05-VK11
KH 3/114 ** ELi 230	G 1 1/4"	25	120	2-F05-VK11
KH 3/112 ** ELi 230	G 1 1/2"	32	142	2-F05
KH 3/20 ** ELi 230	G 2"	40	165	3-F05

* for dimensions and replace. actuators see p. 315, ** please indicate switching pos. See table on page below. (Standard position T1 or L)

Stainless steel 3-way ball valves with electric rotary actuators — PN 63

TA LUFT

Advantages:
- 2 additional limit switches
- Torque cut-off
- Variable voltage (DC or AC)
- Manual emergency operation
- Integrated heating in actuator housing

Ball valve
Materials: Housing: AISI 316, ball: AISI 316, seal: PTFE (15% GF)/FKM
Temperature range: -20°C to max. +180°C
Properties: Pressure inlet is possible from all the three sides.
Operating ranges: Water, oil, compressed air, vacuum (max. -0.9 bar), fuels, solvents, aggressive media
☞ **Optional:** Certificate 3.1

Rotary actuator
Electric rotary actuator with optical position indicator, manual emergency operation and switch room heating. Two additional limit switches are installed for further control requirements. An electronic torque monitoring unit prevents damage in the event of overload. The manual emergency operation can be done without dismantling the external cladding. Do not use upside down!
Materials: Housing: PA 6
Temperature range: -20°C to max. +70°C
Voltage: Type 230: 24 - 240V AC/DC, (actuators can be operated with AC and DC voltage).
Protection class: IP 67, **power-on time:** 75%, **regulating time:** 10 sec.
☞ **Optional:** Regulating time 140 sec. (only for actuator size 2) **-140,** "Battery Safety Return" for emergency closing NC (standard configuration) or emergency opening NO (changeover using jumpers) in case of power failure **-BSR**

Warning: With high media temperatures the actuator must be protected by a thermal bridge or cooled!

Type 230 24-240V AC/DC (INOX)	Thread	DN	Install. length ball valve	Actuator size*
KH 3/14 ** ELi 230 ES	G 1/4"	11	79	2-F03
KH 3/38 ** ELi 230 ES	G 3/8"	11	79	2-F03
KH 3/12 ** ELi 230 ES	G 1/2"	12	79	2-F03
KH 3/34 ** ELi 230 ES	G 3/4"	15	88	2-F03
KH 3/10 ** ELi 230 ES	G 1"	20	108	2-F05-VK11
KH 3/114 ** ELi 230 ES	G 1 1/4"	25	124	2-F05-VK11
KH 3/112 ** ELi 230 ES	G 1 1/2"	32	135	2-F05
KH 3/20 ** ELi 230 ES	G 2"	40	164	3-F05

* for dimensions and replace. actuators see page 315, ** please indicate switching position. See table below. (Standard position T1 or L)

	Standard	Option -FO	L borehole	T borehole			
Position	activated	non activated		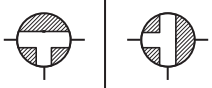			
	non activated	activated		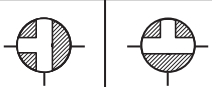			
Switching position			L	T1	T2	T3	T4

Electrically controlled rotary actuators

Advantages: • Mounting flange acc. to ISO 5211, • Manual emergency operation, • 2 additional limit switches
• Torque cut-off, • Variable voltage (DC or AC)
• Integrated heating in actuator housing

Description: Electric rotary actuator with optical position indicator, manual emergency operation and switch room heating. Two additional limit switches are installed for further control requirements. An electronic torque limiting unit prevents damage in the event of overload. The manual emergency operation can be done without dismantling the external cladding. Do not install upside down!
Materials: Housing: PA 6
Temperature range: -20°C to max. +70°C
Voltage: Type 230: 24 - 240V AC/DC (special ind. actuator: 85 - 240V AC/DC,
sanitary actuator: 110 - 240V AC/DC), **Type 24:** 12 - 24V AC/DC (sanitary actuator: 24V AC/DC), (actuators can be powered with AC or DC voltage).
Protection class: IP 67 (sanitary and special industrial actuator: IP 65)
Power-on time: 75%
Installation position: Arbitrary, but not at the top
☞ **Optional (only for industrial actuator):** "Battery Safety Return" for emergency closing NC (standard configuration) or emergency opening NO (changeover using jumpers) in case of power failure **-BSR**

Type **230**	Reg. time sec.	Type **24**	Reg. time sec.	Wiring diagram for ball valve (ISO5211)	Square	Size	Working torque
Sanitary actuator							
ELS 230-1F03	16	ELS 24-1F03	19	F 03	9	1	10 Nm (12 Nm*)
ELS 230-1F05VK9	16	ELS 24-1F05VK9	19	F 05	9	1	10 Nm (12 Nm*)
ELS 230-1F05VK11	16	ELS 24-1F05VK11	19	F 05	11	1	10 Nm (12 Nm*)
ELS 230-1F05	16	ELS 24-1F05	19	F 05	14	1	10 Nm (12 Nm*)
Universal industrial actuator							
ELU 230-2F03	10	---	---	F 03	9	2	20 Nm (25 Nm*)
ELU 230-2F05VK9	10	---	---	F 05	9	2	20 Nm (25 Nm*)
ELU 230-2F05VK11	10	---	---	F 05	11	2	20 Nm (25 Nm*)
ELU 230-2F05	10	---	---	F 05	14	2	20 Nm (25 Nm*)
ELU 230-3F05VK11	10	---	---	F 05	11	3	35 Nm (38 Nm*)
ELU 230-3F05	10	---	---	F 05	14	3	35 Nm (38 Nm*)
ELU 230-4F05	14	---	---	F 05	14	4	55 Nm (60 Nm*)
ELU 230-4F05VK17	14	---	---	F 05	17	4	55 Nm (60 Nm*)
ELU 230-4F07VK14	14	---	---	F 07	14	4	55 Nm (60 Nm*)
ELU 230-4F07	14	---	---	F 07	17	4	55 Nm (60 Nm*)
ELU 230-5F07	30	---	---	F 07	17	5	85 Nm (90 Nm*)
Special industrial actuator							
ELi 230-2F03-140	140	ELi 24-2F03-140	140	F 03	9	2	20 Nm (25 Nm*)
ELi 230-2F05VK9-140	140	ELi 24-2F05VK9-140	140	F 05	9	2	20 Nm (25 Nm*)
ELi 230-2F05VK11-140	140	ELi 24-2F05VK11-140	140	F 05	11	2	20 Nm (25 Nm*)
ELi 230-2F05-140	140	ELi 24-2F05-140	140	F 05	14	2	20 Nm (25 Nm*)
ELi 230-6F10***	34	ELi 24-6F10***	34	F 10	22	6	140 Nm (170 Nm*)
ELi 230-7F10***	58	ELi 24-7F10***	58	F 10	22	7	300 Nm (350 Nm*)
Retrofit kit "Battery Safety Return" for emg. closing (NC)/emg. opening (NO) if there is a power failure**							
ELi BSR	---	ELi BSR	---	---	---	---	---

* max. torque (not for continuous operation), ** not for sizes 6 and 7, *** IP 67

☞ **Order example:** ELU 230-2F03 **
Standard type
Designation for the options:
Battery Safety Return . . . . . **-BSR**

sanitary actuator

universal industrial actuator

special industrial actuator

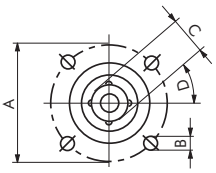

Ball valves with time function — PN 16

Materials: Ball valve housing: Brass nickel-plated, ball: Stainless steel, ball seals: PTFE, actuator housing: Plastic
Temperature range: Medium: +1°C to max. +100°C, environment: +1°C to max. +50°C
Media: Compressed air and other neutral media
Power supply: 230V AC (clock and program are battery buffered)
Protection class: IP 54
Programming: Accurate to the minute, up to 16 switching cycles per day, each weekday individually programmable
Operation: Using timers (automatic), manual operation (timer switch) or manual operation (e.g. power failure). With ceiling installation, we recommend the use of remote controls.

Advantage: Energy savings by automatically closing the compressed air line after work and automatically opening it before work starts

Warning: In case of high media temperatures, the actuator must be cooled!

Type	Thread	Regulating time	DN	Install. length ball valve
Ball valves with timer				
KH TiME 10	G 1“	30 sec.	25	88
KH TiME 20	G 2“	105 sec.	50	130
Remote control with 5 m cable				
KH TiME REMOTE				

type KH TiME 10

type KH TiME REMOTE

Butterfly valves

type KLZ
(intermediate flange)

type KLA
(mounted flange)

For more flange dimensions see page 262.

Butterfly valves — *PN 10/16*

Materials: See ordering example (material codes), hand lever with detend: GGG40 (optional composite material)
Temperature range: See ordering example (material codes - sleeve)
Medium pressure: Max. 16 bar (DN 25: max. 10 bar), please observe the table below
Media: Liquid and gaseous neutral media (depending on the material combination)
Lengths: DIN 3202 T3 K1, ISO 5752-Series 20, NF EN 558-1-Series 20, BS 5155 Table 6 Column 4, API 609 Table 1
☞ **Optional:** Hand wheel gear **-G**, hand lever with detend made of composite material (up to DN 150) **-KU**, pneumatic actuator (see page 317)

Type **intermediate flange**	Type **mounted flange**	DN	Installation length
KLZ 25/10** [9]	---	25	32
KLZ 32/16** [9]	KLA 32/16** [9]	32	32
KLZ 40/16** [9]	KLA 40/16** [9]	40	32
KLZ 50/16**	KLA 50/16**	50	43
KLZ 65/16**	KLA 65/16**	65	46
KLZ 80/16**	KLA 80/16**	80	46
KLZ 100/16**	KLA 100/16**	100	52
KLZ 125/16**	KLA 125/16**	125	56
KLZ 150/16**	KLA 150/16**	150	56
KLZ 200/16**	KLA 200/16** [10]	200	60
KLZ 250/16**	KLA 250/16** [10]	250	68
KLZ 300/16**	KLA 300/16** [10]	300	78

** please enter the required material combination by means of the corresponding material codes
[9] not available in material combination AAA
[10] housing material GG25 is delivered w/ flange connection PN 10

☞ **Order example:** KLZ 32/16 ** ** ** **

Standard type

Material code - housing:
GG25 (standard, compressed air up to 6 bar) . . **A**
GGG40 (higher pressures and temperatures) . . **B**
Stainless steel (aggressive environment) . . . . . **C**

Material code - washer:
GGG40 polyamide coated (standard) . . . . . **A**
Stainless steel (water, abrasive media, food) . . . . . **B**
Aluminium bronze (sea water) . . . . . **C**
GG25 epoxy coated (water) . . . . . **D**
Stainless steel halar coated (chemicals, pharmaceuticals) . . . . . **E**
Stainless steel highly polished (chemicals, pharmaceuticals, food) . . . . . **F**

Designation for the options:
Hand lever with detend made of GGG40 (standard) . **-without additive**
Hand wheel gear . . . . . **-G**
For higher media temperatures: Hand lever with detend made of composite material (instead of GGG40) . . . **-KU**
Pneumatic actuator . . . . . **see page 317**

Material code - sleeve:
EPDM (-10°C to max. +110°C) . . . . . **A**
NBR (+5°C to max. +85°C) . . . . . **B**
FKM (+5°C to max. +180°C) . . . . . **C**
EPDM white (+8°C to max. +80°C) . . . . . **D**
Hypalon (+5°C to max. +90°C) . . . . . **E**
Silicone (-10°C to max. +200°C) . . . . . **F**
NBR containing carboxyl (+5°C to max. +110°C) . . . . . **G**
PTFE/EPDM (+5°C to max. +110°C) . . . . . **H**
PTFE/silicone (-40°C to max. +200°C) . . . . . **I**

Material codes						PN acc. to PED 97/23/CE					
						Group 2 (non-hazardous fluids)			Group 1 (hazardous fluids)		
Housing GG25	Housing GGG40	Housing stainl. st.	Washer material	Sleeve material	Applications	Type **KLZ** Liquid	Gases	Type **KLA** Liquid	Type **KLZ** Liquid	Gases	Type **KLA** Liquid
AAA	BAA	CAA	GGG40, PA coated	EPDM	General & industrial application (free of mineral oil)	16 bar	10 bar [2]	12 bar [4]	16 bar [3]	---	12 bar [4]
AAB [7]	BAB	CAB	GGG40, PA coated	NBR	General & industrial application (contains mineral oil), untreated water	16 bar	10 bar [2]	12 bar [6]	16 bar [3]	---	12 bar [4]
AAG	BAG	CAG	GGG40, PA coated	NBR, contains carboxyl	Abrasive media (in powder form)	10 bar	10 bar [2]	6 bar	10 bar	---	6 bar
ABA*	BBA*	CBA	Stainl. steel	EPDM	Drinking water, gen. & industrial application (free of mineral oil), swimming pool water	16 bar	10 bar [2]	12 bar [4]	16 bar [3]	---	12 bar [4]
ABB	BBB	CBB	Stainl. steel	NBR	General & industrial application (contains mineral oil), hydrocarbons	16 bar	10 bar [2]	12 bar [6]	16 bar [3]	---	12 bar [4]
ABC [8]	BBC	CBC	Stainl. steel	FKM	Hot, dry air or gas, special media	10 bar	10 bar [2]	6 bar	10 bar	10 bar [2]	6 bar
ABD	BBD	CBD	Stainl. steel	EPDM, white	Industrial applications	10 bar	10 bar [2]	6 bar	10 bar	---	6 bar
ABE	BBE	CBE	Stainl. steel	Hypalon	Low contaminated industrial media	16 bar	10 bar [2]	12 bar [6]	16 bar	10 bar [2]	12 bar [6]
ABF	BBF	CBF	Stainl. steel	Silicone	Hot, dry air or gas, special media	10 bar [1]	10 bar [1]	6 bar [5]	10 bar [1]	10 bar [1]	6 bar [5]
ABG	BBG	CBG	Stainl. steel	NBR, contains carboxyl	Abrasive media (in powder form)	10 bar	10 bar [2]	6 bar	10 bar	---	6 bar
---	BBH	---	Stainl. steel	PTFE/EPDM	Food, drinks, pharmaceutical and cosmetic media	10 bar [1]	10 bar [1]	6 bar [5]	10 bar [1]	10 bar [1]	6 bar [5]
---	BBI	---	Stainl. steel	PTFE/silicon	Chemical liquids, food industry	10 bar	10 bar	6 bar	10 bar	10 bar	6 bar
ACA	BCA	CCA	Alu bronze	EPDM	General & industrial application (free of mineral oil), swimming pool water	16 bar	10 bar [2]	12 bar [4]	16 bar [3]	---	12 bar [4]
ACB	BCB	CCB	Alu bronze	NBR	Sea water, shipyards	16 bar	10 bar [2]	12 bar [6]	16 bar [3]	---	12 bar [4]
ADA	BDA	CDA	GG25, epoxy coated	EPDM	Untreated water	16 bar	10 bar [2]	12 bar [4]	16 bar [3]	---	12 bar [4]
ADB	BDB	CDB	GG25, epoxy coated	NBR	Untreated water	16 bar	10 bar [2]	12 bar [6]	16 bar [3]	---	12 bar [4]

preferred type, especially quick delivery, [1] DN>150: 6 bar, [2] DN>150: 8 bar, [3] DN>125: 10 bar, [4] DN>125: 6 bar, [5] DN>150: 4 bar, [6] DN>150: 10 bar,
[7] only available from DN 50 up, [8] type KLZ only available from DN65 up, * DVGW drinking water

Butterfly valves with pneumatic rotary actuators — PN 10/16

Butterfly valve
Materials: See ordering example (material codes)
Temperature range: See ordering example (material codes - sleeve)
Medium pressure: Max. 16 bar (DN 25: max 10 bar)
Media: Liquid and gaseous neutral media (depending on the material combination)
Lengths: DIN 3202 T3 K1, ISO 5752-Series 20, NF EN 558-1-Series 20, BS 5155 Table 6 Column 4, API 609 Table 1

Rotary actuator
Design: ATEX-compliant ⟨Ex⟩ II 2GD c 85°C (Actuators with size 12 or greater: ⟨Ex⟩ II 2GD c 110°C)
Materials: Housing: Aluminium anodised, gear rack and piston: Aluminium, cover: Acetal resin, seal: NBR
Temperature range: -20°C to max. +80°C
Control pressure: 6 - 10 bar (lower pressures upon request)
☞ **Optional:** Manual emergency operation **-HN**

Warning: In case of high media temperatures, the actuator must be cooled!

Type double acting	Type spring closing	Type spring opening	DN	Install. length	Actuator size* Double act.	Actuator size* Single act.
Intermediate flange						
KLZ 25/10** P [9]	KLZ 25/10** PFS [9]	KLZ 25/10** PFO [9]	25	32	6 (VK11)	6 (VK11)
KLZ 32/16** P [9]	KLZ 32/16** PFS [9]	KLZ 32/16** PFO [9]	32	32	6 (VK11)	6 (VK11)
KLZ 40/16** P [9]	KLZ 40/16** PFS [9]	KLZ 40/16** PFO [9]	40	32	6 (VK11)	6 (VK11)
KLZ 50/16** P	KLZ 50/16** PFS	KLZ 50/16** PFO	50	43	6 (VK11)	12 (VK11)
KLZ 65/16** P	KLZ 65/16** PFS	KLZ 65/16** PFO	65	46	6 (VK11)	12 (VK11)
KLZ 80/16** P	KLZ 80/16** PFS	KLZ 80/16** PFO	80	46	6 (VK11)	12 (VK11)
KLZ 100/16** P	KLZ 100/16** PFS	KLZ 100/16** PFO	100	52	12 (F07VK14)	25 (F07VK14)
KLZ 125/16** P	KLZ 125/16** PFS	KLZ 125/16** PFO	125	56	25 (F07VK14)	50 (VK14)
KLZ 150/16** P	KLZ 150/16** PFS	KLZ 150/16** PFO	150	56	25 (F07VK14)	50 (VK14)
KLZ 200/16** P	KLZ 200/16** PFS	KLZ 200/16** PFO	200	60	50 (VK14)	50 (VK14)
KLZ 250/16** P	KLZ 250/16** PFS	KLZ 250/16** PFO	250	68	90	130
KLZ 300/16** P	KLZ 300/16** PFS	KLZ 300/16** PFO	300	78	90 (F12VK22)	130 (F12VK22)
Mounted flange						
KLA 32/16** P [9]	KLA 32/16** PFS [9]	KLA 32/16** PFO [9]	32	32	6 (VK11)	6 (VK11)
KLA 40/16** P [9]	KLA 40/16** PFS [9]	KLA 40/16** PFO [9]	40	32	6 (VK11)	6 (VK11)
KLA 50/16** P	KLA 50/16** PFS	KLA 50/16** PFO	50	43	6 (VK11)	12 (VK11)
KLA 65/16** P	KLA 65/16** PFS	KLA 65/16** PFO	65	46	6 (VK11)	12 (VK11)
KLA 80/16** P	KLA 80/16** PFS	KLA 80/16** PFO	80	46	6 (VK11)	12 (VK11)
KLA 100/16** P	KLA 100/16** PFS	KLA 100/16** PFO	100	52	12 (F07VK14)	25 (F07VK14)
KLA 125/16** P	KLA 125/16** PFS	KLA 125/16** PFO	125	56	25 (F07VK14)	50 (VK14)
KLA 150/16** P	KLA 150/16** PFS	KLA 150/16** PFO	150	56	25 (F07VK14)	50 (VK14)
KLA 200/16** P [10]	KLA 200/16** PFS [10]	KLA 200/16** PFO [10]	200	60	50 (VK14)	50 (VK14)
KLA 250/16** P [10]	KLA 250/16** PFS [10]	KLA 250/16** PFO [10]	250	68	90	130
KLA 300/16** P [10]	KLA 300/16** PFS [10]	KLA 300/16** PFO [10]	300	78	90 (F12VK22)	130 (F12VK22)

* replacement actuators are found on page 310
** please enter the required material combination by means of the corresponding material codes
[9] not available in material combination AAA
[10] type KLA as of DN 200 with housing material GG 25 with flange connection PN 10

for Namur connection and thread female

type KLZ (intermediate flange)

for Namur connection and thread female

type KLA (mounted flange)

For more flange sizes see page 362.

☞ **Order example:** KLZ 32/16 ** ** ** P **

Standard type

Designation for the options:
Manual emergency operation . .**-HN**

Material code - housing:
GG25 (standard, compressed air up to 4 bar) . .**A**
GGG40 (higher pressures and temperatures) . .**B**
Stainless steel (aggressive environment) . . . . . **C**

Material code - sleeve:
EPDM (-10°C to max. +110°C) . . . . . **A**
NBR (+5°C to max. +85°C) . . . . . **B**
FKM (+5°C to max. +180°C) . . . . . **C**
EPDM white (+8°C to max. +80°C) . . . . . **D**
Hypalon (+5°C to max. +90°C) . . . . . **E**
Silicone (-10°C to max. +200°C) . . . . . **F**
NBR containing carboxyl (+5°C to max. +110°C) . . . **G**
PTFE/EPDM (+5°C to max. +110°C) . . . . . **H**
PTFE/silicone (-40°C to max. +200°C) . . . . . **I**

Material code - washer:
GGG40 polyamide coated (standard) . . . . . **A**
Stainless steel (water, abrasive media, food) . . . . . **B**
Aluminium bronze (sea water) . . . . . **C**
GG25 epoxy coated (water) . . . . . **D**
Stainless steel halar coated (chemicals, pharmaceuticals) . . . . . **E**
Stainless steel highly polished (chemicals, pharmaceuticals, food) . . . . . **F**

Technical data of material combinations can be found in the Online Shop

Butterfly valves for pressure levels PN 20/PN 25 can be found in the Online Shop

In our Online Shop you can find the butterfly valves offered here in the optional pressure levels PN 20 to PN 25.

☞ **Order example:** KLZ */20 ** P

Standard type

Designation for the options:
PN 20 . . . . . **-20**
PN 25 . . . . . **-25**